General catalogue on welding electrode

SHINKO

SHINKO WEL-TEC SERVICE CO., LTD.

Products name and their setting

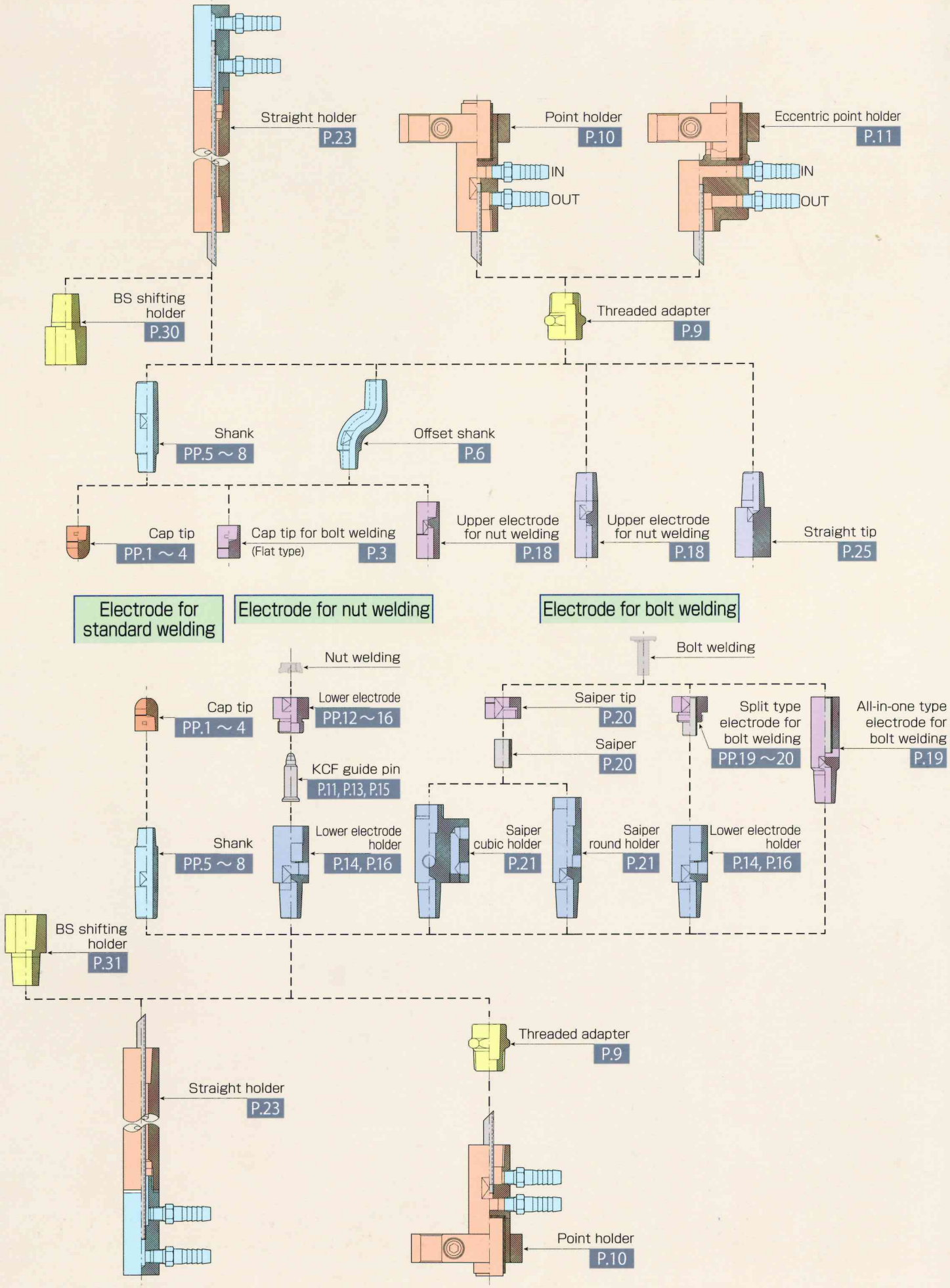

CONTENTS

Page

CAP TIP 1~4
- Standard shape
- Original shape
- Cap tip remover

SHANK 5~6
- Straight shank
- Offset shank

ORIGINAL SHANK 7~8
- Stepped shank
- Straight shank

THREADED ADAPTER 9

POINT HOLDER/ECCENTRIC POINT HOLDER 10~11
- Point holder
- Eccentric point holder

LOWER ELECTRODE FOR NUT WELDING (ORIGINAL) 12~14
- KCF guide pin
- Lower electrode
- Lower electrode holder

LOWER ELECTRODE FOR NUT WELDING (TOYOTA) 15~16
- KCF guide pin
- Lower electrode
- Lower electrode holder

CERAMIC GUIDE PIN (Si_3N_4) 17

UPPER ELECTRODE FOR NUT WELDING 18

ELECTRODE FOR BOLT WELDING 19~21
- All-in-one type electrode for bolt welding
- Split type electrode for bolt welding
- Saiper tip
- Saiper cubic holder
- Saiper round holder

DEVICES FOR GOOD WELDING 22
- Water cooling jacket

STRAIGHT HOLDER / L-SHAPED HOLDER 23
- Straight holder / L-shaped holder

INSERT ELECTRODE / BASE TIP 24
- Insert electrode / Base tip

SPOT TIP 25~31
- Straight tip
- Offset tip
- Offset casting tip
- Double spot casting tip
- Swievel tip
- CuBe insert tip holder
- Insert tip
- BS insert holder
- CuBe insert holder cap nut type
- Gun tip
- Gun shank
- Triangular holder
- BS horn
- BS shifting holder
- CuCr shifting holder

CABLE / TRANSFORMER ADAPTER 32

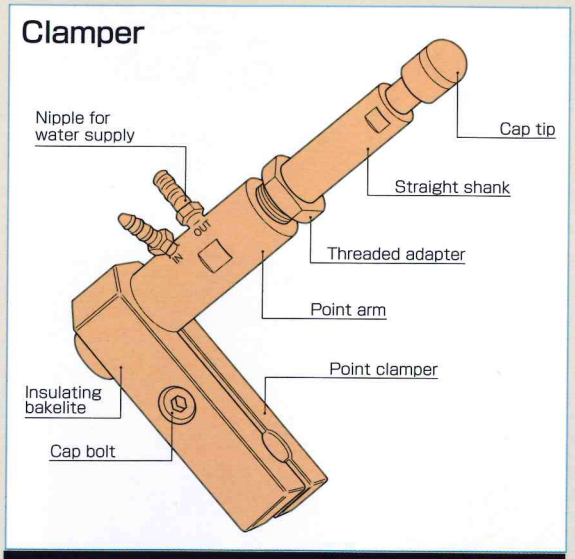

Cap tip

Electrode contacting with work (object to be welded)

Application

▶ This will be used mainly as replacing electrode as attaching and replacing electrode tip for Shank or Gun-arm (Holder) etc.

Features

▶ ① Selection of material are Copper chrome alloy (a/C), Copper chrome zirconium alloy (Z), Dispersion strengthen copper alumina alloy (D) and Eco alloy (e) to meet welding condition, welding object and etc.

② By usage of cap tip, cooling water can go through to tip of electrode that reduce lowering in heat conductivity and protect from softening of the tip of electrode.

Material 16 × 6 Tip shape

Outer diameter / Tip diameter / A, R, E, P ,F

Z CuCrZr
a/C CuCr
D Dispersion strengthen copper alumina alloy
e Eco alloy

Standard shape

Type A

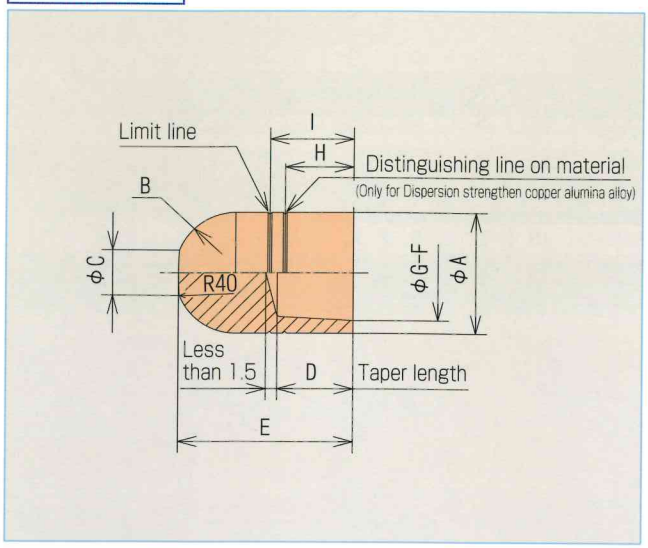

Order code

Material (Ø) A × (Ø) C (Tip shape) A

Unit : mm

Model	Size								
	A	B	C	D	E	F	G	H	I
Material : Z (CuCrZr)									
Z16X6A	16	8	6	10	23	1/9.6	12.7	–	11
Z16X8A	16	8	8	10	23	1/9.6	12.7	–	11
Z16X12A	16	8	12	10	23	1/9.6	12.7	–	11
Z13X6A	13	8	6	9	20	1/9.6	10.1	–	11
Material : D (Dispersion strengthen copper alumina alloy)									
D16X6A	16	8	6	10	23	1/9.6	12.6	9	11
D13X6A	13	8	6	9	20	1/9.6	10	9	11
Material : a/C (CuCr)									
a16X6A	16	8	6	10	23	1/9.6	12.6	–	9
a13X6A	13	8	6	9	20	1/9.6	10	–	10
C19X8A	19	8	8	15	25	1/10	14	–	11.5
Material : e (Eco alloy)									
e16X6A	16	8	6	10	23	1/9.6	12.7	–	11
e13X6A	13	8	6	9	20	1/9.6	10.1	–	11

Type R

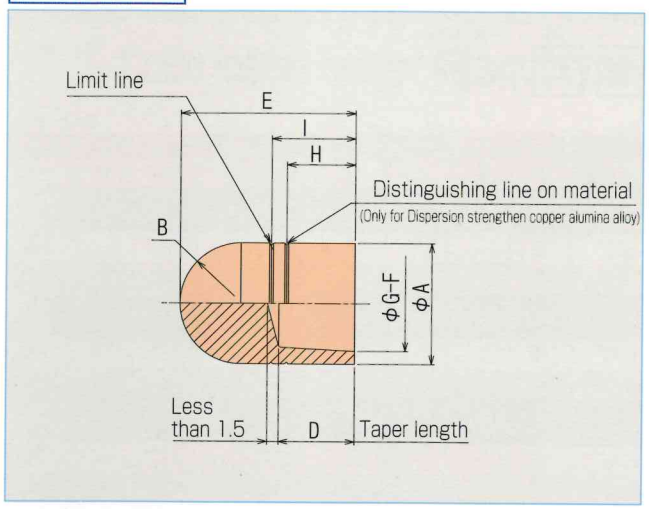

Order code

Material (Ø) A × (R) B (Tip shape) R

Unit : mm

Model	Size								
	A	B	C	D	E	F	G	H	I
Material : Z (CuCrZr)									
Z16X8R	16	8	–	10	23	1/9.6	12.7	–	11
Z13X6.5R	13	6.5	–	9	20	1/9.6	10.1	–	11
Material : D (Dispersion strengthen copper alumina alloy)									
D16X8R	16	8	–	10	23	1/9.6	12.6	9	11
D13X6.5R	13	6.5	–	9	20	1/9.6	10	9	11
Material : e (Eco alloy)									
e16X8R	16	8	–	10	23	1/9.6	12.7	–	11
e13X6.5R	13	6.5	–	9	20	1/9.6	10.1	–	11

Type E

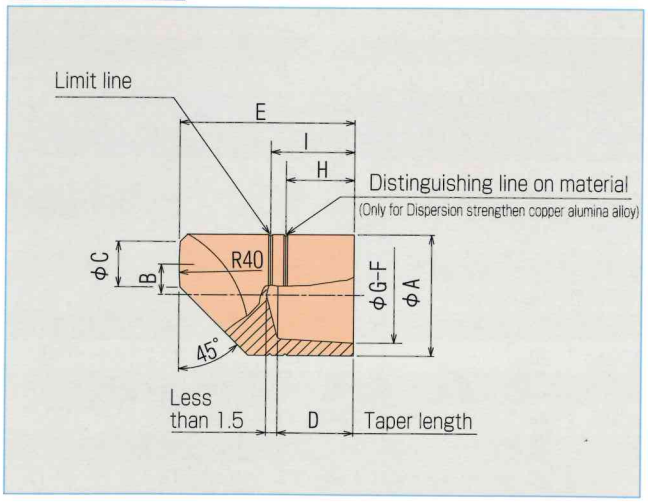

Order code

Material (Ø) A × (Ø) C (Tip shape) E

Unit : mm

Model	Size								
	A	B	C	D	E	F	G	H	I
Material : Z (CuCrZr)									
Z16X6E	16	4	6	10	23	1/9.6	12.7	–	11
Z13X6E	13	3	6	9	20	1/9.6	10.1	–	11
Material : D (Dispersion strengthen copper alumina alloy)									
D16X6E	16	4	6	10	23	1/9.6	12.6	9	11
D13X6E	13	3	6	9	20	1/9.6	10	9	11

Type P

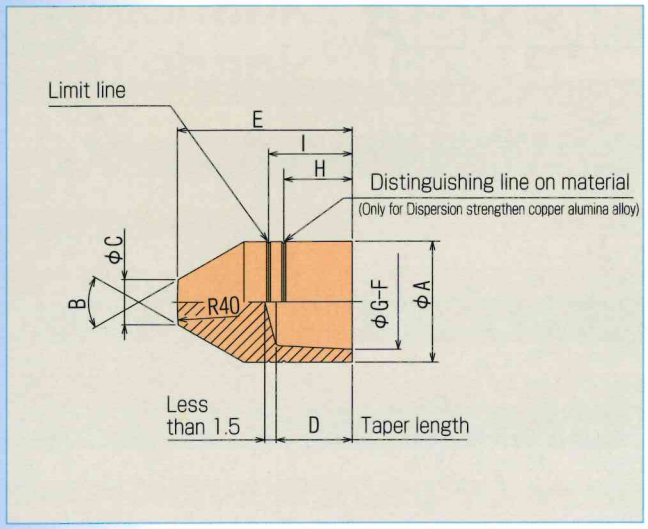

Order code

Material (Ø) A × (Ø) C (Tip shape) P

Unit : mm

Model	Size								
	A	B	C	D	E	F	G	H	I
Material : Z (CuCrZr)									
Z16X6P	16	60°	6	10	23	1/9.6	12.7	–	11
Z13X6P	13	60°	6	9	20	1/9.6	10.1	–	11
Material : D (Dispersion strengthen copper alumina alloy)									
D16X6P	16	60°	6	10	23	1/9.6	12.6	9	11
D13X6P	13	60°	6	9	20	1/9.6	10	9	11

Type F

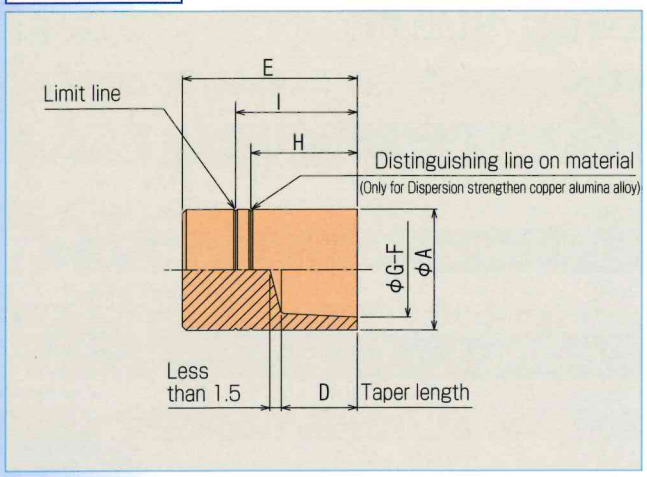

Order code

Material (Ø) A × (Tip shape) F

Unit : mm

Model	Size								
	A	B	C	D	E	F	G	H	I
Material : Z (CuCrZr)									
Z16XF	16	–	–	10	23	1/9.6	12.7	–	16
Z13XF	13	–	–	9	20	1/9.6	10.1	–	14
Material : D (Dispersion strengthen copper alumina alloy)									
D16XF	16	–	–	10	23	1/9.6	12.6	14	16
D13XF	13	–	–	9	20	1/9.6	10	12	14
Material : e (Eco alloy)									
e16XF	16	–	–	10	23	1/9.6	12.7	–	16
e13XF	13	–	–	9	20	1/9.6	10.1	–	14
Material : a/C (CuCr)									
C-19XF	19	–	–	15	25	1/10	14	–	17

How to define the model

Tip shape - Outer diameter Total length

Example F – 13 25

Unit : mm

Model	Size								
	A	B	C	D	E	F	G	H	I
Original type F Material : a/C (CuCr)									
F-0920	9	–	–	9	20	1/10	7.1	–	14
F-1325	13	–	–	10	25	1/9.6	10.1	–	16
F-1330	13	–	–	10	30	1/9.6	10.1	–	16
F-1340	13	–	–	10	40	1/9.6	10.1	–	16
F-1630	16	–	–	11	30	1/9.6	12.7	–	17
F-1825	18	–	–	11	25	1/9.6	12.7	–	17
F-2025	20	–	–	11	25	1/9.6	12.7	–	17
F-2030	20	–	–	11	30	1/9.6	12.7	–	17
F-2225	22	–	–	11	25	1/9.6	12.7	–	17
F-2525	25	–	–	11	25	1/9.6	12.7	–	17
F-3025	30	–	–	11	25	1/9.6	12.7	–	17

Original shape Material : CuCrZr

Type A

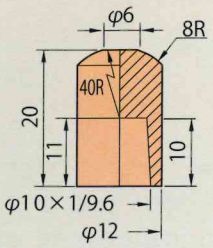

M-12 × 6A

Type C

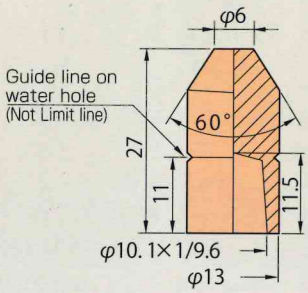

C-1327

Type 5A

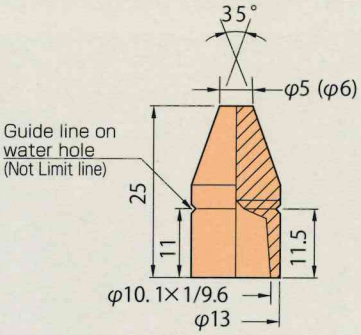

5A-1325

6A-1325

Type C

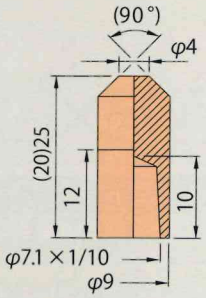

C-0920

C-0925

Type P

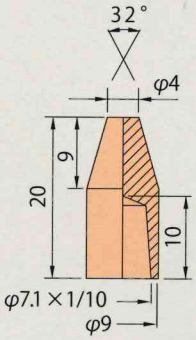

P-0920

Type E

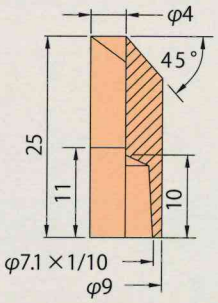

E-0925

Cap tip remover

Cap tip remover (without handle)

For φ9, φ13, φ16, φ19

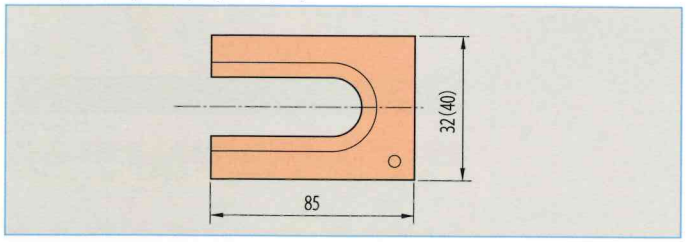

Cap tip remover (with handle)

For φ9, φ13, φ16, φ19

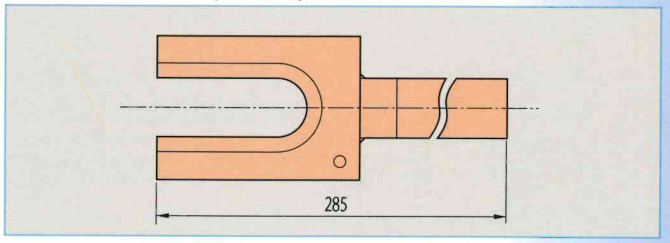

Twin cap tip remover For φ13 / For φ16 (Dual usage)

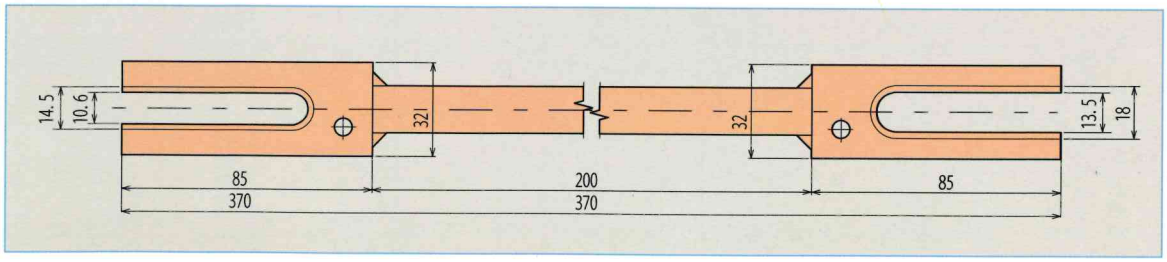

SHANK Made of CuBe25

Straight Shank

Application

▶ Use to join Cap tip and Holder.

Features

▶ ① Made of high beryllium content copper alloy (CuBe25) having high hardness and tensile strength, fatigue endurance and abrasion resistance.

② This shank has long life as this has lower abrasion, bruise and deformation on taper than it made of other material when Cap tip is put on and off.

※ Shank made of CuCrZr in size ϕ16 is in stock.

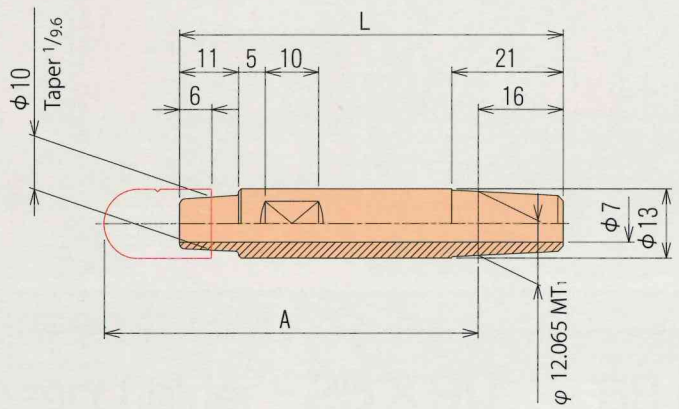

Spanner face for holding are 2 faces width 10

Order code

W-SH- Diameter (Ø) × A (Effective length) - Taper

Ø13 : Taper MT1

Unit : mm

Size		
Diameter	A	L
13	25	25
13	30	30
13	35	35
13	40	42
13	50	52
13	60	62
13	70	72
13	80	82
13	90	92
13	100	102

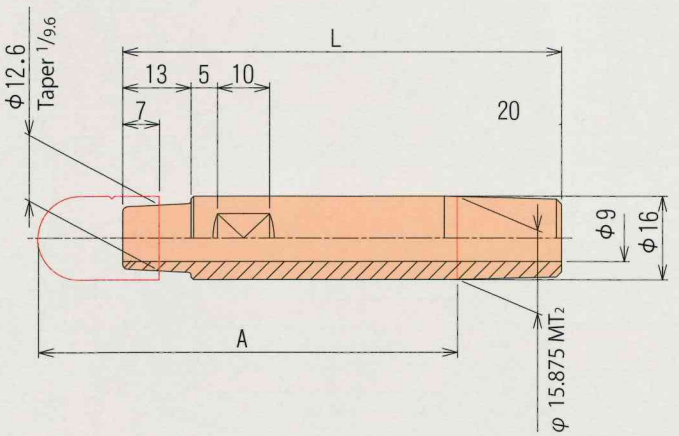

Spanner face for holding are 2 faces width 13

Ø16 : Taper MT2

Unit : mm

Size		
Diameter	A	L
16	40	44
16	50	54
16	60	64
16	70	74
16	80	84
16	90	94
16	100	104
16	110	114
16	120	124
16	130	134
16	140	144
16	150	154

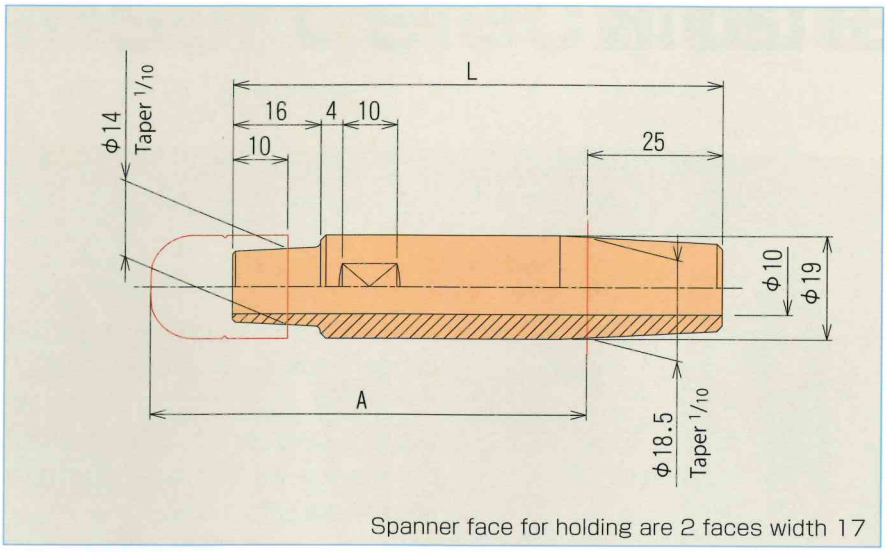

Order code

W-SH-Diameter × A - Taper

(Ø) (Effective length)

Ø19 : Taper 18.5 1/10

Unit : mm

Size		
Diameter	A	L
19	40	50
19	50	60
19	60	70
19	70	80
19	80	90
19	90	100
19	100	110

Offset shank

Application

▶ Offset shank is used when the work (welding point) is locating unsuitable location for straight shank.

Features

▶ ① Made of high beryllium content copper alloy (CuBe25) having high hardness and tensile strength, fatigue endurance and abrasion resistance.

② This shank has long life as this has lower abrasion, bruise and deformation on taper than it made of other material when Cap tip is put on and off.

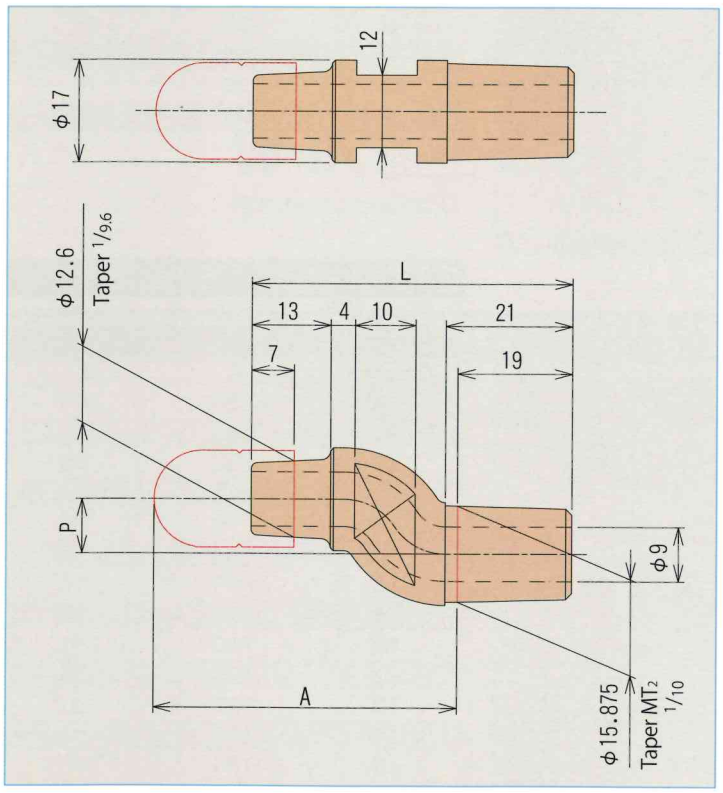

Order code

W-SH-16 × A - P H-Taper

(Ø) (Effective length) (Eccentric length)

Ø16 : Taper MT2, 16 1/10

Unit : mm

Size		
L	A	P
53	50	3
53	50	6
53	50	9
53	50	13
63	60	3
63	60	6
63	60	9
63	60	13
63	60	15
63	60	19
83	80	6
83	80	9
83	80	13
83	80	15
83	80	19
83	80	25
103	100	19

Original shank

Application

▶ Use to join Cap tip and Holder.

Features

▶ ① Made of high beryllium content copper alloy (CuBe25) having high hardness and tensile strength, fatigue endurance and abrasion resistance as same as Straight shank and Offset shank.

② Original material is by φ16 rod and made suitable for Cap tip φ9 and φ13. On connecting portion with main machine is available in tape MT2, 16-1/10, 16-1/5.

※ φ9 only can be used at low pressure condition.

Stepped shank Our special model

【For ø9】

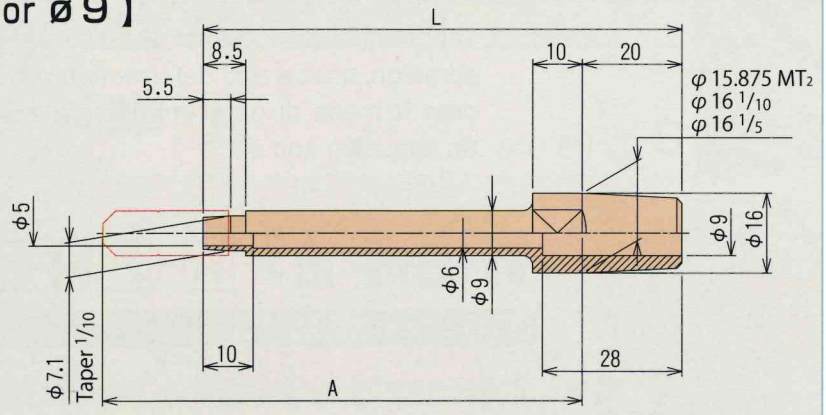

Spanner face for holding are 2 faces width 13

Order code (ø)

B Diameter - A - Taper

Ø9 : Taper MT2 or 16 1/10, 16 1/5

Unit : mm

Size		
Diameter	A	L
9	38	38
9	56	56
9	76	76
9	96	96

【For ø13】

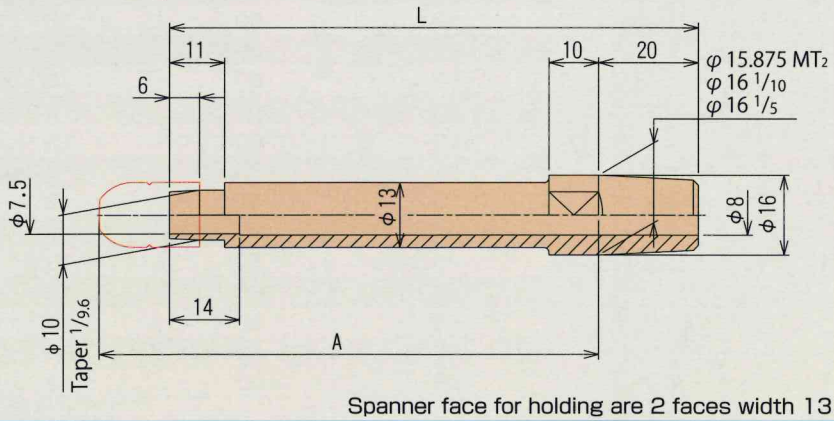

Spanner face for holding are 2 faces width 13

Ø13 : Taper MT2 or 16 1/10, 16 1/5

Unit : mm

Size		
Diameter	A	L
13	30	36
13	40	46
13	50	56
13	60	66
13	70	76
13	80	86
13	90	96
13	100	106
13	110	116
13	120	126
13	130	136
13	140	146
13	150	156

Straight shank Our special model

【For ø13】

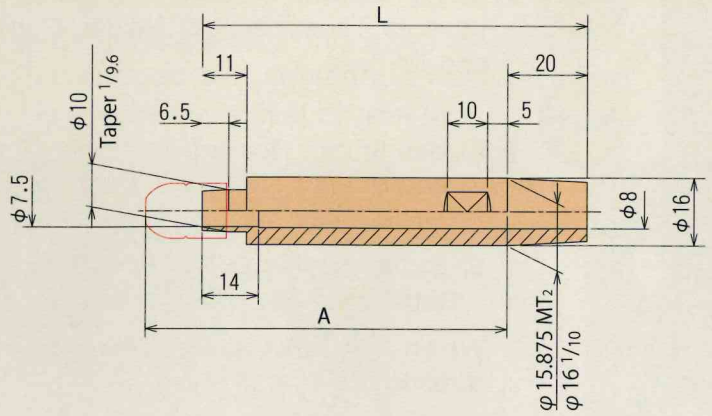

Spanner face for holding are 2 faces width 13

Order code (ø)

SKK-13 × A - Taper

Ø13 : Taper MT2, 16 1/10

Unit : mm

Size		
Diameter	A	L
13	40	46
13	50	56
13	60	66
13	70	76
13	80	86
13	90	96
13	100	106
13	110	116
13	120	126

【For ø13】

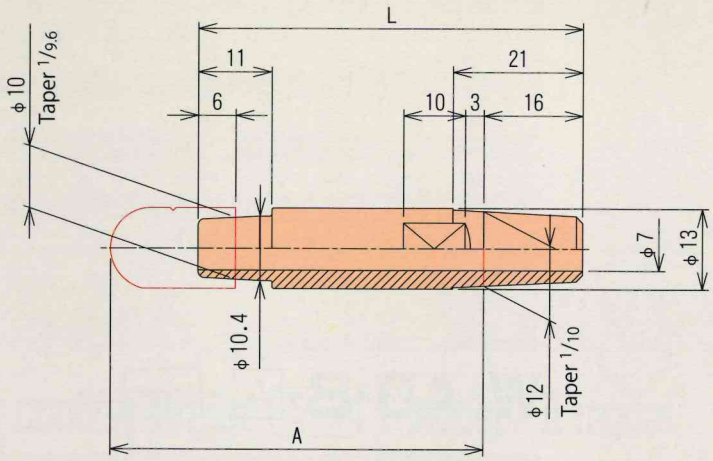

Spanner face for holding are 2 faces width 10

Order code (ø)

~~W-SK-13~~ × A - Taper

W-SH-13

Ø13 : Taper 12 1/10

Unit : mm

Size		
Diameter	A	L
13	26	25
13	30	30
13	35	35
13	40	42
13	50	52
13	60	62
13	70	72
13	80	82
13	90	92
13	100	102

【For ø16】

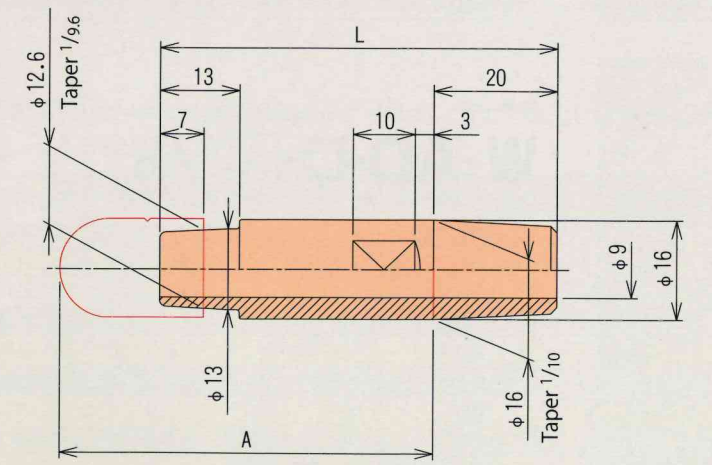

Spanner face for holding are 2 faces width 13

Order code (ø)

W-SH-16 × A - Taper

Ø16 : Taper 16 1/10, 16 1/5

Unit : mm

Size		
Diameter	A	L
16	40	44
16	50	54
16	60	64
16	70	74
16	80	84
16	90	94
16	100	104
16	110	114
16	120	124
16	130	134
16	140	144
16	150	154

Threaded adapter Connecting electrodes

Application

▶ Mainly used for stud gun. This also can be used as Taper parts of Holder, Gun holder and Tip base.

Features

▶ ① Use to joint Holder (Gun holder, Tip base) and Shank. This is suitable for partial replacement and length adjustment.

② By application of CuBe50, it reduces taper damage and obtained durability.

※ When you set, please put shank on threaded adapter firstly.

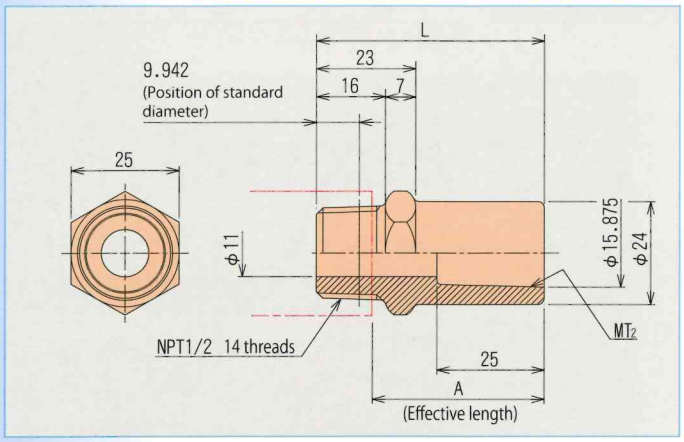

Order code

(Effective length)

W-AD-A-[A]-[Taper]

Unit : mm

Size			
A	L	Taper	Applicable shank
10	23	MT2, 1/10	Ø16
15	28	MT2	Ø16
20	33	MT2	Ø16
30	43	MT2	Ø16
40	53	MT2	Ø16
50	63	MT2	Ø16
60	73	MT2	Ø16

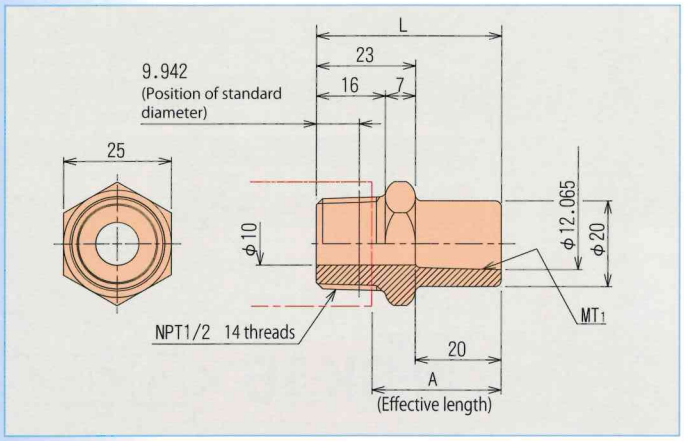

Order code

(Effective length)

W-AD-B-[A]-[Taper]

Unit : mm

Size			
A	L	Taper	Applicable shank
10	23	MT1, 1/10	Ø13
15	28	MT1	Ø13
20	33	MT1	Ø13
30	43	MT1	Ø13
40	53	MT1	Ø13
50	63	MT1	Ø13
60	73	MT1	Ø13

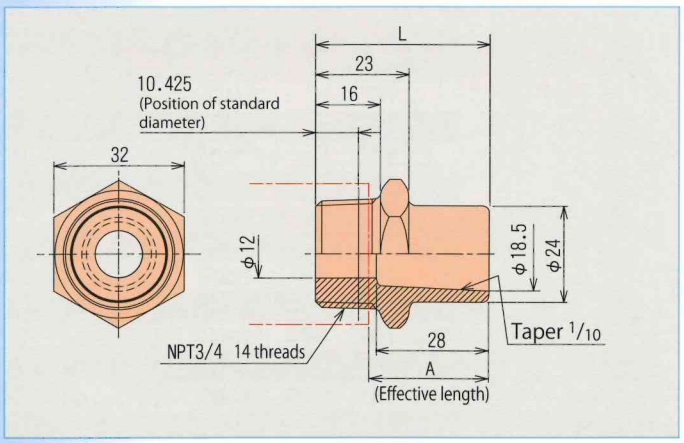

Order code

(Effective length)

W-AD-D-[A] 1/10

Unit : mm

Size			
A	L	Taper	Applicable shank
10	23	1/10	Ø19
15	28	1/10	Ø19
20	33	1/10	Ø19
30	43	1/10	Ø19
40	53	1/10	Ø19
50	63	1/10	Ø19
60	73	1/10	Ø19

Point holder/Eccentric point holder

(Arm + Clamper)

Application

- Holder mainly used for stud gun.
- Connecting (Interrupting) side of holder arm should be fixed with Stud cylinder rod side (Clamper setting side). Threaded side (NTP side) of point holder (Inside of holder there are threads) will be fixed with threaded adapter.

Features

- This is multiple parts having necessary functions such as insulator with stud cylinder and cooling water circuit.

Difference between Toyota and Nissan

	Thread	Cooling thread position	Pipe thread size
Toyota	NPT	20°	M6 P = 0.75
Nissan	PT	0°	M6 P = 0.75

- Specification varies according to clamper.

Type A	A1 : Pitch (A+B) 41
	A2 : Pitch (A+B) 54
Type B	B : Pitch 21

Applicable pressure (Data by Toyota)

W-PH-A1 · A2	Apply for lower than 3.9KN (400kgf)
W-PH-B	Apply for more than 3.9KN (400kgf) but lower than 6.9KN (700kgf)
S-PH-C2X13·19	Apply lower than 2.9KN (300kgf)

Point holder

Point holder + Clamper

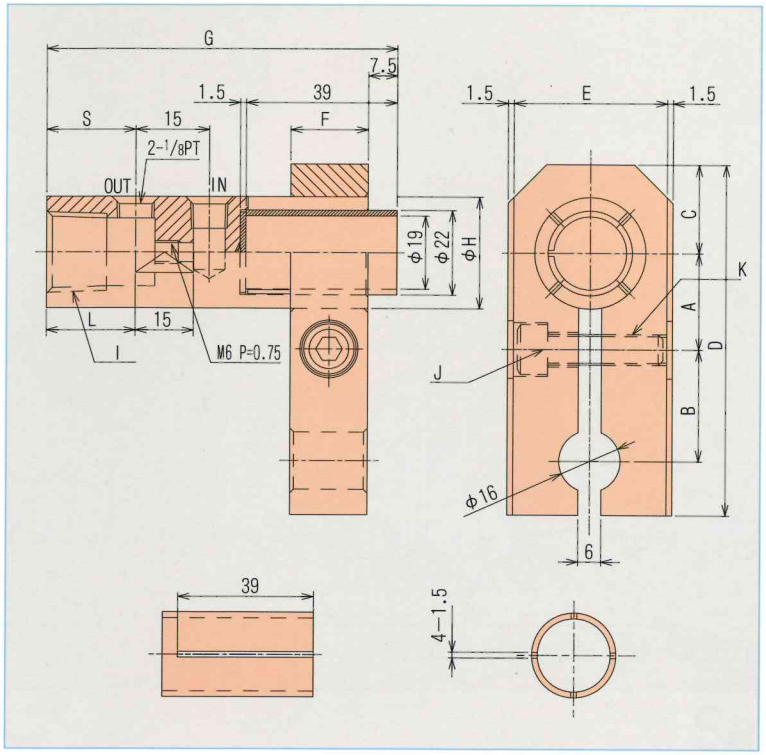

Order code

W-PH-□□ (Clamper symbol)

[Attaching clamper symbol]

A1→A1 A2→A2 B→B

Unit : mm

Clamper symbol	Size													
	A	B	C	D	E	F	G	H	I	J	K	L	Spanner width	S
A1	25	16	23	78	40	20	90.5	29	NPT1/2 14 threads	M 8 × 28	M 8 P=1.25 helical insert	23	27	23
A2	29	25	23	91	40	20	90.5	29	NPT1/2 14 threads	M 8 × 28	M 8 P=1.25 helical insert	23	27	23
B	33	21	27	95	45	25	96.5	35	NPT3/4 14 threads	M10 × 32	M10 P= 1.5 helical insert	29	32	25

Note: Length of helical insert thread is more than 1.5d.

Eccentric point holder

● Difference between Toyota and Nissan

	Thread	Cooling thread position	Pipe thread size
Toyota	NPT	20°	M6 P=0.75
Nissan	PT	20°	M6 P=0.75

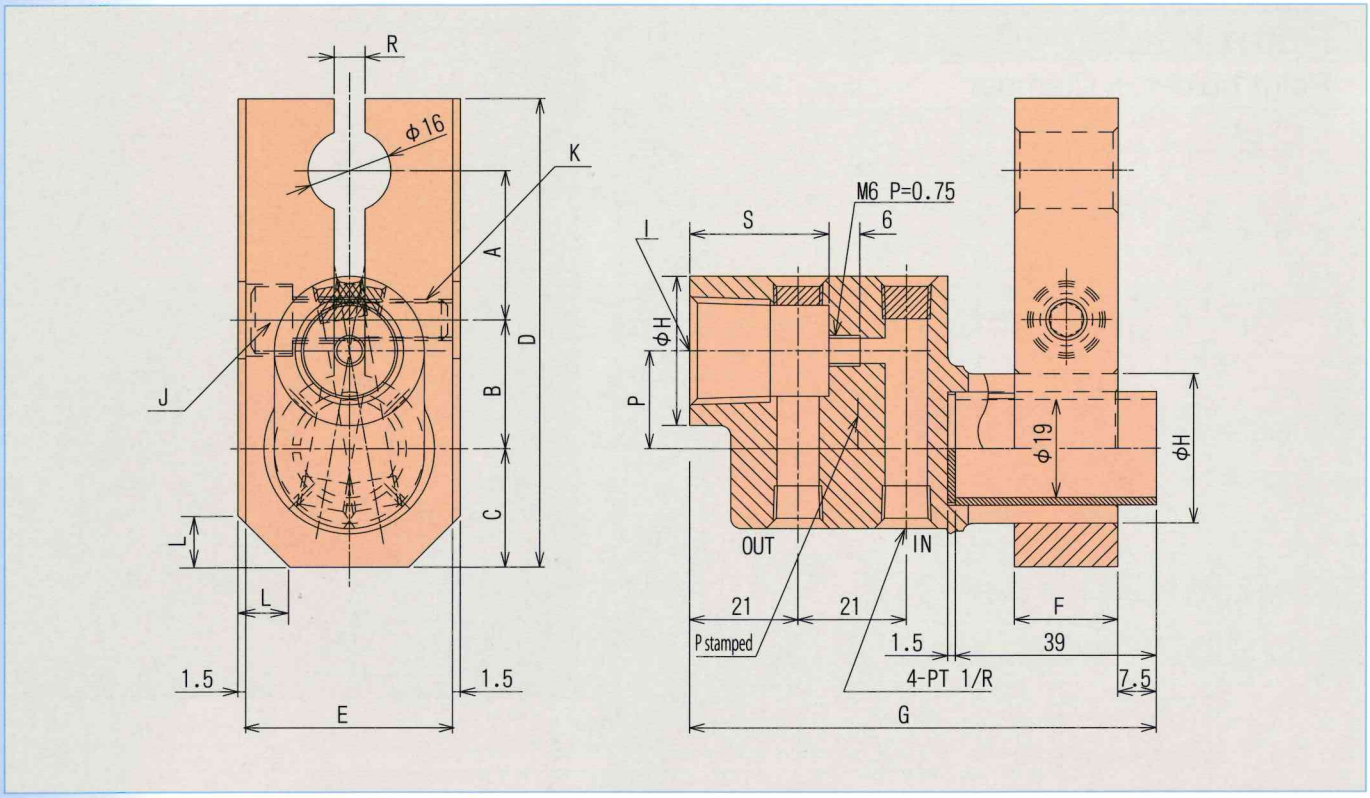

Order code

W-PH- Clamper symbol × P (Eccentric size)

Unit : mm

Clamper symbol	Size														
	A	B	C	D	E	F	G	H	I	J	K	L	P	R	S
C1	16	25	23	78	40	20	90.5	29	NPT1/2 14 threads	M8 × 28 bolt	M8 P=1.25 helical insert	10	13	8	27
C2	29	25	23	91	40	20	90.5	29	NPT1/2 14 threads	M8 × 28 bolt	M8 P=1.25 helical insert	10	13	8	27
C1	16	25	23	78	40	20	90.5	29	NPT1/2 14 threads	M8 × 28 bolt	M8 P=1.25 helical insert	10	19	8	27
C2	32	25	23	91	40	20	90.5	29	NPT1/2 14 threads	M8 × 28 bolt	M8 P=1.25 helical insert	10	19	8	27

Lower electrode for nut welding (Original)

Our special designed lower electrode for Weld nut (Anti center core dislocation design)

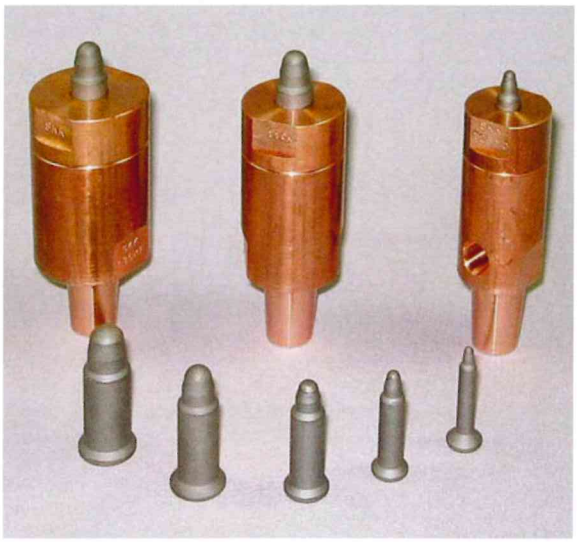

Application

- KCF guide pin
- Lower electrode
- Lower electrode holder

Lower electrode for weld nuts is combination of these 3 kinds

- Please use by set of KCF guide pin, Lower electrode and Lower electrode holder.

※ Guide pin will be lifted stably by either Air flow or Spring.

Features

Guide pin

① Guide pin has fitting point matching with nut diameter.

② Guide pin is available in pitch of 0.2mm in pin diameter.

Lower electrode

There are two kinds, one is made of Chrome Zirconium Copper (CuCrZr) and another is made of CuBe50.

Especially CuBe50 is suitable for projection welding and have long life.

Lower electrode holder

There are wide selections in taper degree and 3 choices in lower electrode holder length that enable efficient cooling effect. By application of water cooling jacket, you can get adjustment on location that make you easy to escape from the trouble on location of the welding object.

KCF guide pin Our special model

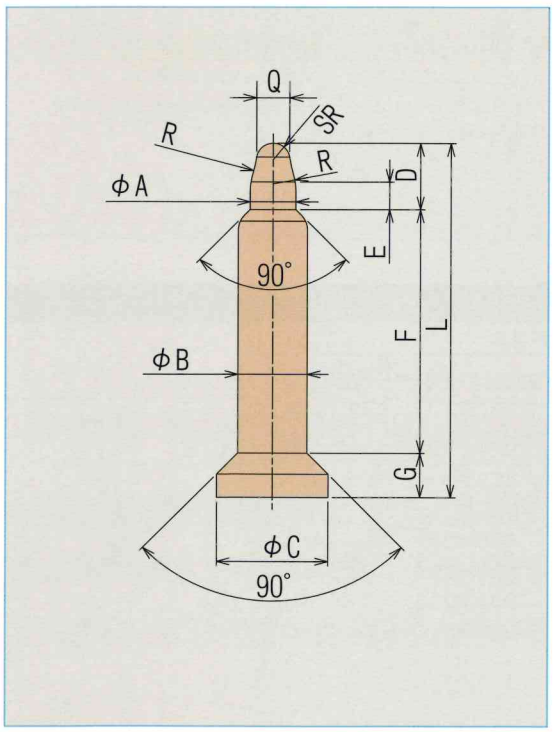

Order code

KCF- [Nut size (Ø)] **-** [Pin diameter øB]

Ex. In case M6 nut with press hole 7.0 (Order code) KCF-M6-6.8

Unit : mm

Nut size	Size									
	A	B	C	D	E	F	G	L	Q	R
M4	3.2	4~7	10	5	2.0	22	4	31	2.5	9.0
M5	4.1	5~8	10	6	2.5	22	4	32	3.0	13.3
M6	4.9	6~10	10	7	2.5	22	3	32	3.5	15.5
M8	6.6	8~11	12	8	3.0	23	3	34	5.0	17.5
M10	8.5	10~13	15	10	3.5	24	3	37	7.0	30.5
UNIFY	9.7	11~14	16	12	4.0	24	3	39	8.0	37.5
M12	10.4	12~15	16	12	4.0	24	3	39	9.0	41.0

◆φB (pin diameter) is available every 0.2mm.

Lower electrode

Our special model

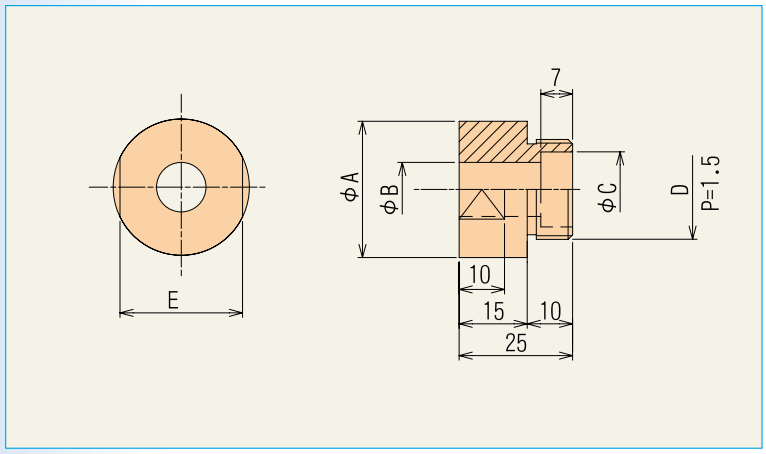

125MO・130MO・135MO・125BO・130BO・135BO

Order code

(Ø) ØB

Product name - Pin diameter

MO : CuCrZr
BO : CuBe50

Ex. In case 125MO and Pin B diameter is 6.8
(Order code) 125MO-6.8

Unit : mm

Product name	Size				
	A	B	C	D	E
125MO	25	*	12.5	M18	22
130MO	30	*	16.5	M22	27
135MO	35	*	16.5	M22	32
125BO	25	*	12.5	M18	22
130BO	30	*	16.5	M22	27
135BO	35	*	16.5	M22	32

* φ B (pin diameter) is available every 0.2mm.

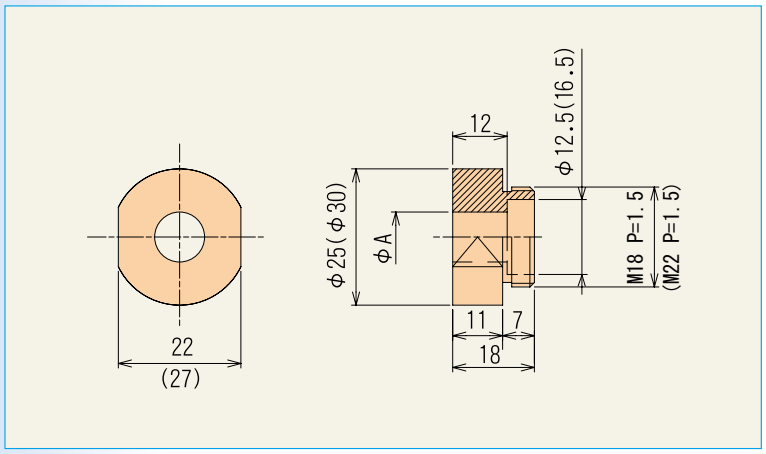

225MO・230MO

Order code

Product name - Type

Patented product

Unit : mm

Product name	Type	Size
		A
225MO	24	5.0
225MO	25	6.0
225MO	26	7.0
225MO	27	7.2
225MO	28	9.1
230MO	210	11.0
230MO	211	12.0
230MO	212	13.0

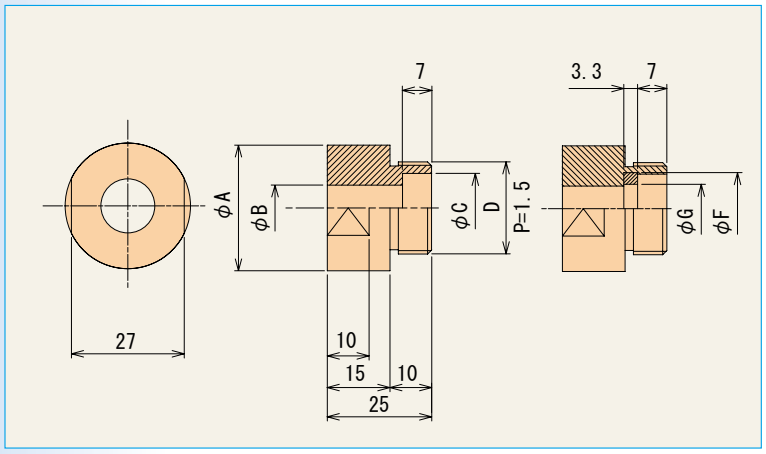

525BO・530BO

Order code

(Ø) ØB

Product name - Pin diameter

Unit : mm

Product name	Size						
	A	B	C	D	E	F	G
525BO	25	*	12.5	M18	22	13.2	*
530BO	30	*	16.5	M22	27	17.2	*

* φ B (pin diameter) is available every 0.2mm.
* φ G is rubber packing. (It is available every 0.1mm)
* Please ask our salesman.

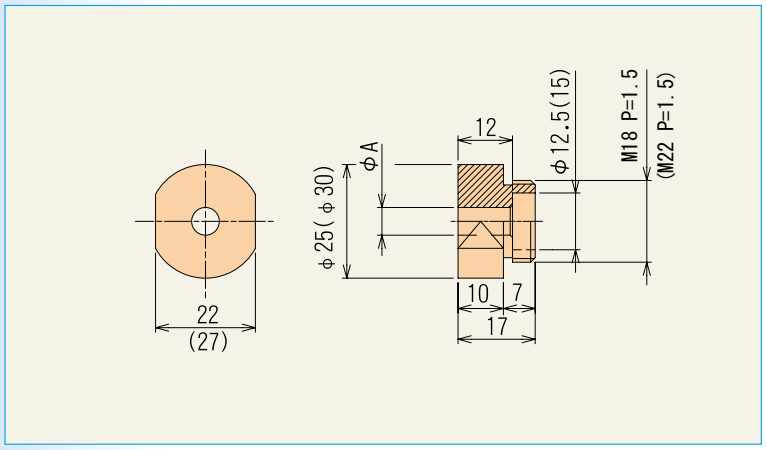

625MO・630MO

Order code

Product name - Type

Unit : mm

Product name	Type	Size
		A
625MO	M 4	5.1
625MO	M 5	6.1
625MO	M 6	7.1
625MO	M 8	9.1
630MO	M10	11.1
630MO	M12	13.1

Lower electrode holder

Our special model

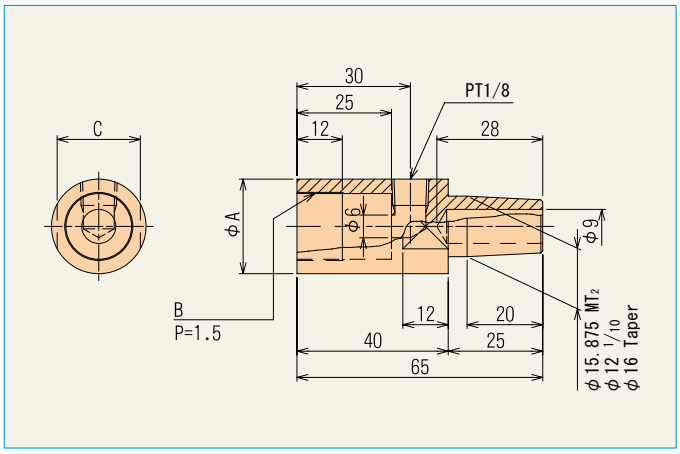

125MF • 130MF • 135MF

Order code

Product name - Taper

Unit : mm

Product name	Size			
	A	B	C	Taper
125MF	25	M18	22	$12\frac{1}{10}$, $16\frac{1}{10}$, $16\frac{1}{5}$, MT2, $20\frac{1}{10}$, $20\frac{1}{5}$
130MF	30	M22	27	$16\frac{1}{10}$, $16\frac{1}{5}$, MT2, $20\frac{1}{10}$, $20\frac{1}{5}$
135MF	35	M22	32	$16\frac{1}{10}$, $16\frac{1}{5}$, MT2, $20\frac{1}{10}$, $20\frac{1}{5}$

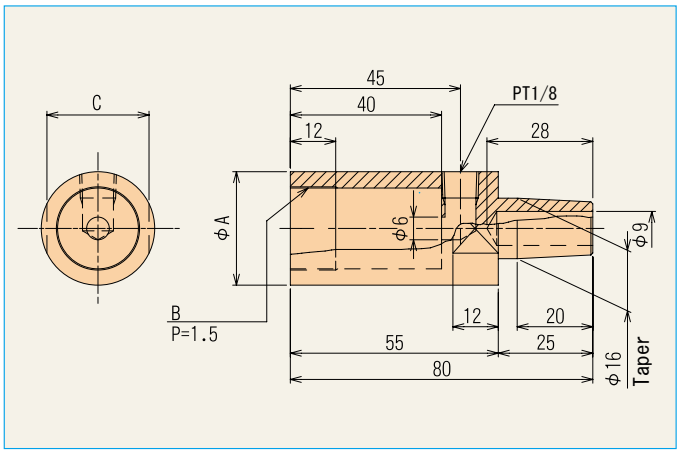

125MF • 130MF Semi long holder

Order code

Product name - Semi long - Taper

Unit : mm

Product name	Size			
	A	B	C	Taper
125MF	25	M18	22	$16\frac{1}{10}$, $16\frac{1}{5}$
130MF	30	M22	27	$16\frac{1}{10}$, $16\frac{1}{5}$

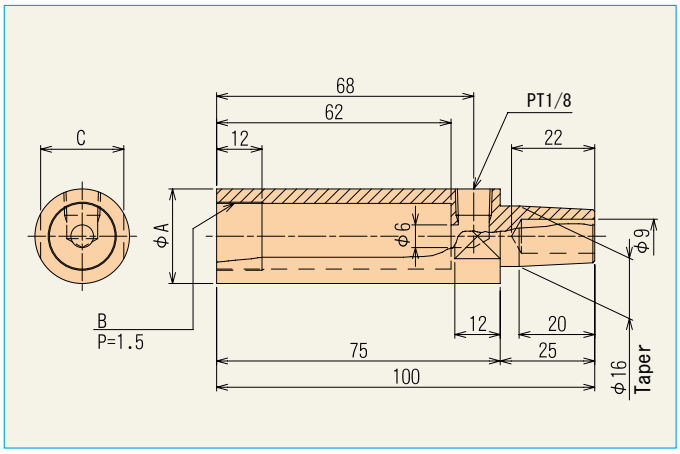

125MF • 130MF Long holder

Order code

Product name - Long - Taper

Unit : mm

Product name	Size			
	A	B	C	Taper
125MF	25	M18	22	$16\frac{1}{10}$, $16\frac{1}{5}$
130MF	30	M22	27	$16\frac{1}{10}$, $16\frac{1}{5}$

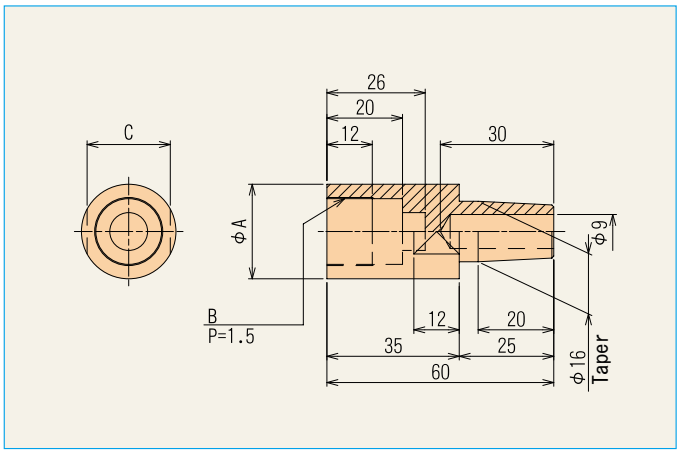

625MF • 630MF

Order code

Product name - Taper

Unit : mm

Product name	Size			
	A	B	C	Taper
625MF	25	M18	22	$16\frac{1}{10}$, $16\frac{1}{5}$
630MF	30	M22	27	$16\frac{1}{10}$, $16\frac{1}{5}$

Lower electrode for nut welding (Toyota)

Welding electrode for projection nut

Application

- **KCF guide pin**
- **Lower electrode**
- **Lower electrode holder**

Lower electrode for weld nuts is combination of these 3 kinds

- Please use by set of KCF guide pin, Lower electrode and Lower electrode holder

※ Guide pin will be lifted stably by Air flow.

Features

- Shape of Guide pin tip is tapered convexed.
  R shaped taper enable stable nut insert and holding.

KCF guide pin

Welding electrode for projection nut

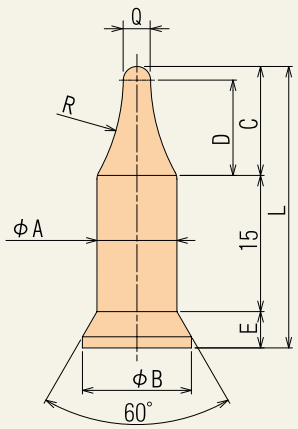

Order code

W-PN- Code

Unit : mm

Nut	Code	Size							
		A	B	L	C	D	E	Q	R
M4	**4P**	4.8	12.0	29.0	6.5	5.5	7.5	2	11.0
M5	**5P**	5.8	12.0	30.0	8.5	7.5	6.5	2	15.0
M6	**6P**	6.8	12.0	31.5	11.0	9.5	5.5	3	23.6
M8	**8P**	8.8	12.0	31.0	12.0	10.5	4.0	3	21.7
M10	**10P**	10.8	16.0	34.5	14.0	12.0	5.5	4	22.3
M12	**12P**	12.8	16.0	36.0	17.0	15.0	4.0	4	27.0

Lower electrode

Welding electrode for projection nut

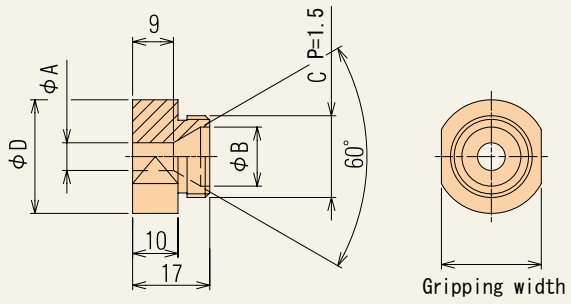

Order code

W-PN-C Code

Unit : mm

Nut	Code	Size				
		A	B	C	D	Gripping width
M4	**4**	5.1	13	M18	25	22
M5	**5**	6.1	13	M18	25	22
M6	**6**	7.1	13	M18	25	22
M8	**8**	9.1	13	M18	25	22
M10	**10**	11.1	17	M22	30	27
M12	**12**	13.1	17	M22	30	27

For W-PN

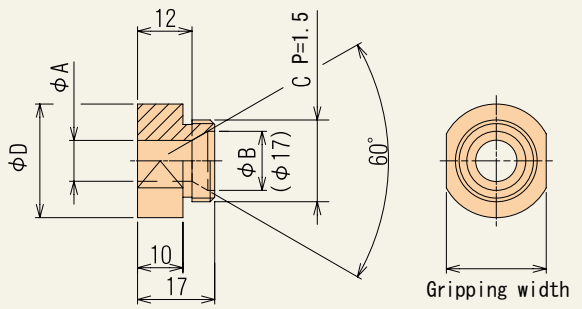

Order code

TMS-C Code

Unit : mm

Nut	Code	Size				
		A	B	C	D	Gripping width
M4	**4**	5	—	M18	25	22
M5	**5**	6	—	M18	25	22
M6	**6**	7	—	M18	25	22
M8	**8**	9	13	M18	25	22
M10	**10**	11	—	M22	30	27
M12	**12**	13	17	M22	30	27

Lower electrode holder

Welding electrode for projection nut

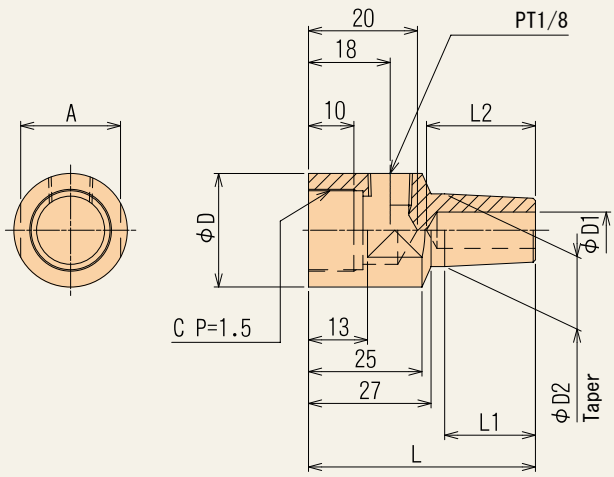

Order code

W-PN-B Code - Taper

Unit : mm

Code	Size								
	A	C	D	D_1	D_2	Taper	L	L_1	L_2
1	22	M18	25	8	12.065	**MT1**	45	16	18
2	27	M22	30	8	15.875	**MT2,16$^1/_{10}$,16$^1/_5$**	50	20	24
3	22	M18	25	8	15.875	**MT2,16$^1/_{10}$,16$^1/_5$**	50	20	24

Ceramic guide pin (Si_3N_4)

Ceramic guide pin

Material : Silicon nitride

Application

▶ Guide pin for weld nut welding.

Features

▶ ① This is excellent durability in attrition, so it is not necessary to do maintenance in attrition.

② The material is insulator so operation of work putting on/off is very smooth.

③ This ceramic is one of Fine ceramic and having high durability in attrition, heat and impact. Further this is given HIP (Hot Isostatic Pressing) treatment that increase durability in impact.

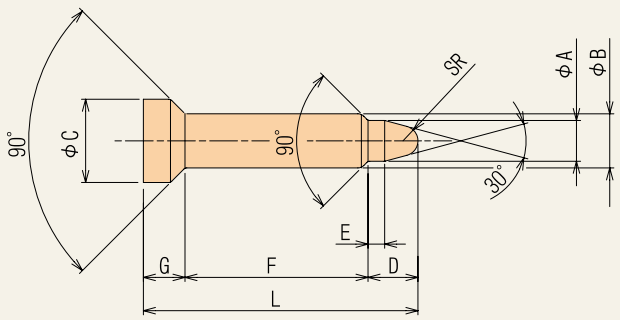

(Only M 6 7.9 C＝φ12)

Order code

SAIMINASU-Code-B

Unit : mm

Nut	Code	Size							
		A	B	C	D	E	F	G	L
M 4	**M 4**	3.2	4.8, 5.0, (5.9)	11	5	2.0	21	5	31
M 5	**M 5**	4.2	5.8, 6.0, (6.9)	11	6	2.0	21	5	32
M 6	**M 6**	4.9	6.8, 7.0	10	6	2.0	22	5	33
M 8	**M 8**	6.7	8.8, 9.0, (9.9)	12	7	2.5	22	5	34
M10	**M10**	8.5	10.8, 11.0, (11.9)	16	10	3.0	23	5	38
	UNIFY	9.8	11.8, 12.0, 12.8, 13.0	16	10	3.0	23	5	38
M12	**M12**	10.5	12.8, 13.0, (13.9)	16	10	3.0	23	5	38
	6/8 Two-way		8.8, 9.0	12	6	2.0	22	5	37

＊( )is only available by order.

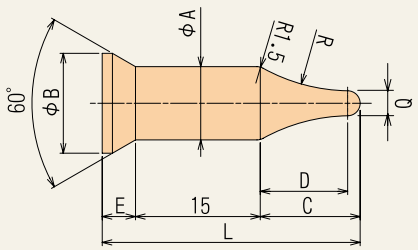

Order code

S-WPN-Code

Unit : mm

Nut	Code	Size							
		A	B	C	D	E	Q	R	L
M 4	**4P**	4.8	12	6.5	5.5	7.5	2	11.0	29.0
M 5	**5P**	5.8	12	8.5	7.5	6.5	2	15.5	30.0
M 6	**6P**	6.8	12	11.0	9.5	5.5	3	22.5	31.5
M 8	**8P**	8.8	12	12.0	10.5	4.0	3	45.0	31.0
M10	**10P**	10.8	16	14.0	12.0	5.5	4	23.0	34.5
M12	**12P**	12.8	16	17.0	15.0	4.0	4	27.6	36.0

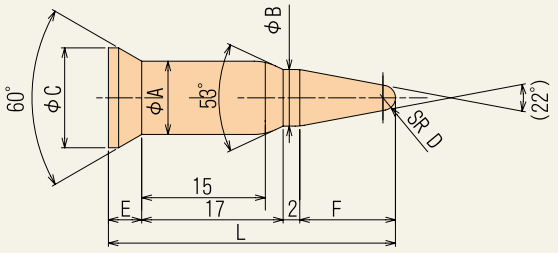

Order code

S-WPN-Code

Unit : mm

Nut	Code	Size						
		A	B	C	D	E	F	L
M6/M8	**6/8 P**	8.8	6.8	12	1.4	4	11.5	34.5
M8/M10	**8/10 P**	10.8	8.8	16	1.5	6	12.0	37.0

Upper electrode for nut welding

Upper holder for weld nut

Application

▶ Upper electrode for weld nut welding.

Features

▶ ① We have 2 kinds of upper electrode One is Cap type and another is all-in-one type.

② Material for cap system is CuBe50 that is suitable for projection welding. Further this enable cooling to tip toe and realize long life.

Material : CuBe50

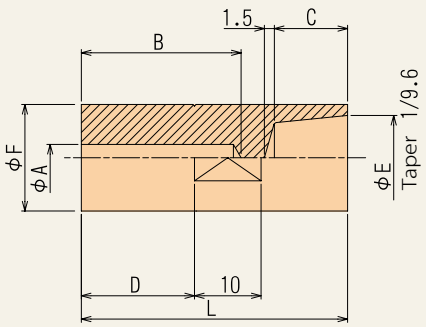

Order code

M(Ø)A-N(Ø)F(Overall length)L

Unit : mm

Nut	Size							
	A	B	C	D	E	F	L	Spanner width
M 4	4	25	10	19	10.1	13	40	11
M 5	5	25	10	19	10.1	13	40	11
M 6	6	25	10	19	10.1	13	40	11
M 4	4	24	11	17	12.7	16	40	14
M 5	5	24	11	17	12.7	16	40	14
M 6	6	24	11	17	12.7	16	40	14
M 8	8	24	11	17	12.7	16	40	14
M 8	8	33	11	23	12.7	20	48	17
M10	10	33	11	23	12.7	20	48	17
M12	12	33	11	23	12.7	25	48	22

Material : CuCr

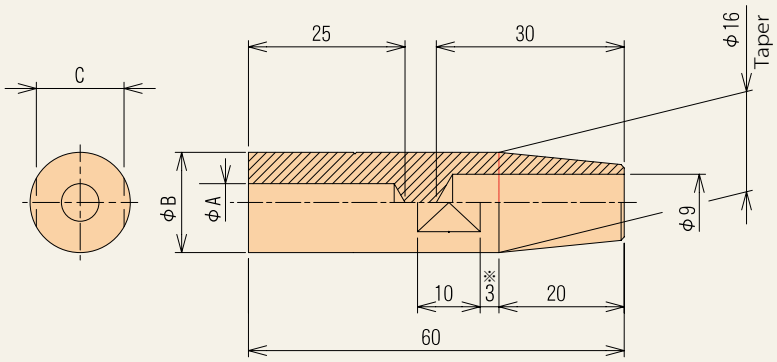

※ M4 ~ M8 are 3mm. M10, M12 are 5mm.

Order code

M(Ø)A/(Ø)B×60-Taper

Taper : $16^{1}/_{10}$, $16^{1}/_{5}$

Unit : mm

Nut	Size		
	A	B	C
M 4	4	16	14
M 5	5	16	14
M 6	6	16	14
M 8	8	16	14
M10	10	22	20
M12	12	25	22

Electrode for bolt welding

Application

▶ By application of insulating materials (KCF, Ceramics) inside of electrode, it prevents screw from breakage and damage due to electric split flow.

Features

▶ We have all-in-one type and split type.

① All-in-one type
By making electrode diameter thinner, it can work on welding at narrow position.

② Split type
Only lower electrode can be replaced. There are 2 kinds by difference of insulating materials. This works only combination with * lower electrode holder.
* This lower electrode holder is same with lower electrode holder for weld nut.

- **Integrated type with electrode for bolt**
  Lower electrode using KCF as insulator. KCF is metal with insulating coating and superior in electrical insulation and durability in impulse.
- **Saiper tip (Si_3N_4)**
  Lower electrode using KCF as insulator. This is excellent in abrasion resistance. Because insulating material is used as insulator, this has high insulation. You can change Saiper tip only.

All-in-one type electrode for bolt welding

All-in-one type (Integrated)

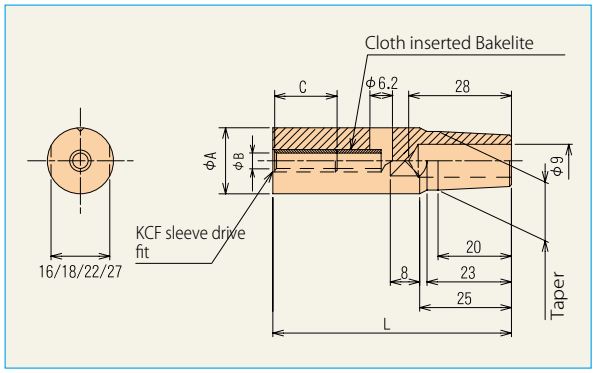

Order code

A B Code B - L - Taper

All-in-one type

Unit : mm

Nut	Size					
	A	Code	B	C	L	Taper
M 4	18	4	4.2	17	65	$16^1/_{10}$,$16^1/_5$
M 5	18	5	5.2	17	65	$16^1/_{10}$,$16^1/_5$
M 6	18	6	6.2	22	70	$16^1/_{10}$,$16^1/_5$
M 8	20	8	8.2	27	75	$16^1/_{10}$,$16^1/_5$
M10	25	10	10.2	32	85	$16^1/_{10}$,$16^1/_5$
M12	30	12	12.2	32	85	$16^1/_{10}$,$16^1/_5$

Cloth inserted Bakelite.
KCF sleeve drive fit

Split type electrode for bolt welding

Split type （KCF）

Order code

A MB-B Code - B

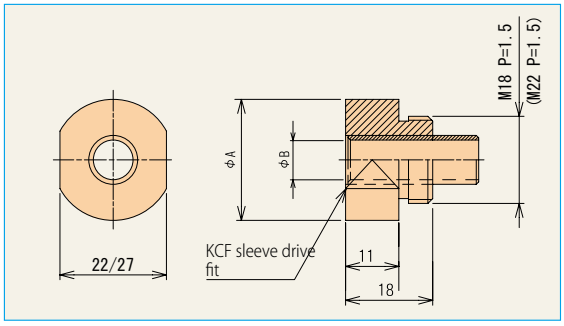

Dual use as holder for welding nuts

Unit : mm

Nut	Code	Size	
		A	B
M 4	4	25	4.2
M 5	5	25	5.2
M 6	6	25	6.2
M 8	8	25	8.2
M10	10	30	10.2
M10	10	35	10.2
M12	12	30	12.2
M12	12	35	12.2

KCF sleeve drive fit

KCF sleeve

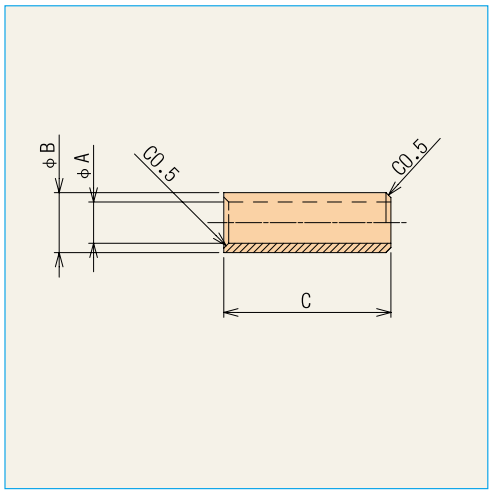

Order code (Sleeve inside diameter) (φ)

KCF-A Code A

Unit : mm

Code	Size		
	A	B	C
4	4	5.1	17
5	5	6.1	17
6	6	7.1	22
7	7	8.1	22
8	8	9.1	27
9	9	10.1	27
10	10	11.1	32
11	11	12.1	32
12	12	13.1	32

Order code (Sleeve inside diameter) (φ)

KCF-B Code A

Unit : mm

Code	Size						
	A					B	C
4	4.0	4.2	4.4	4.6	4.8	6.1	17
5	5.0	5.2	5.4	5.6	5.8	7.1	17
6	6.0	6.2	6.4	6.6	6.8	8.1	22
7	7.0	7.2	7.4	7.6	7.8	9.1	22
8	8.0	8.2	8.4	8.6	8.8	10.1	27
9	9.0	9.2	9.4	9.6	9.8	11.1	27
10	10.0	10.2	10.4	10.6	10.8	12.1	32
11	11.0	11.2	11.4	11.6	11.8	13.1	32
12	12.0	12.2	12.4	12.6	12.8	14.1	32
13	–	13.2	–	–	–	15.1	32
14	–	14.2	–	–	–	16.1	32
15	–	15.2	–	–	–	17.1	32

Saiper tip

Split type (Saiper)

Order code

A MB-Saiper Inside diameter × Outer diameter - Length

Ceramic

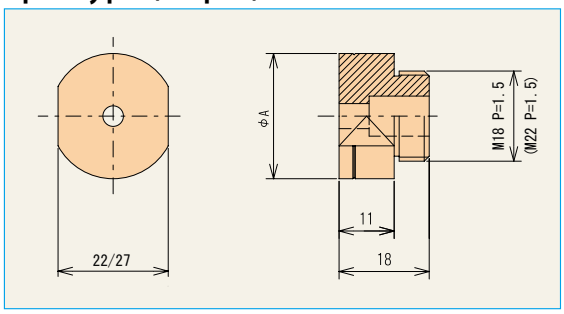

Dual use as holder for welding nuts

Unit : mm

Size	Saiper size		
A	Inside diameter	Outer diameter	Length
25	4.2	8	20
25	5.2	9	20
25	6.2	10	20
25	8.2	12	20
30	10.2	14	25
30	12.2	16	25

Saiper holder Ø15 × 10t, Ø19 × 5t Bakelite

Order code

Saiper tip M Code

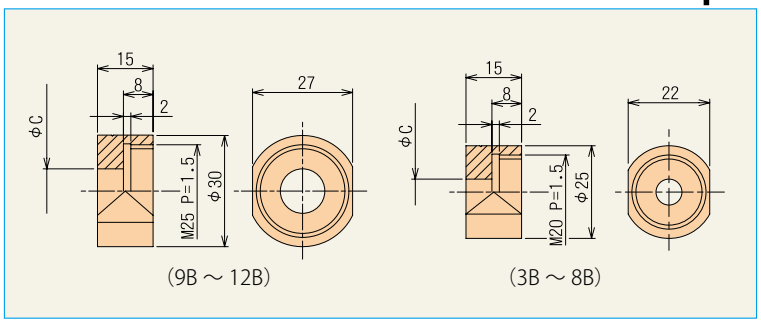

Unit : mm

Code	Size
	C
3B	4
4B	5
5B	6
6B	7
8B	9
10B	11
12B	13

Saiper (Made for Saiminasu)

Order code

Saiper M Code

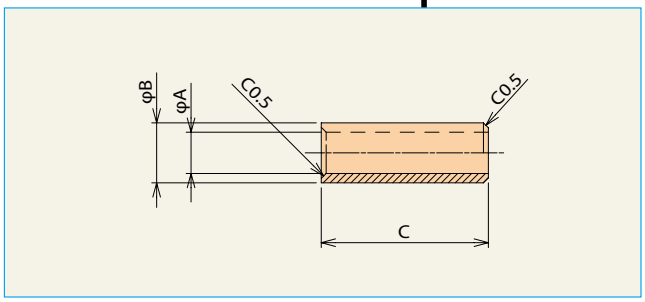

Unit : mm

Code	Size		
	$A^{+0.4}_{-0}$	$B^{+0}_{-0.3}$	$C^{+0}_{-0.5}$
3	3.0	7	20
4	4.0	8	20
5	5.0	9	20
6	6.0	10	20
7	7.0	11	20
8	8.0	12	20
9	9.0	13	25
10	10.0	14	25
11	11.0	15	25
12	12.0	16	25

Saiper cubic holder

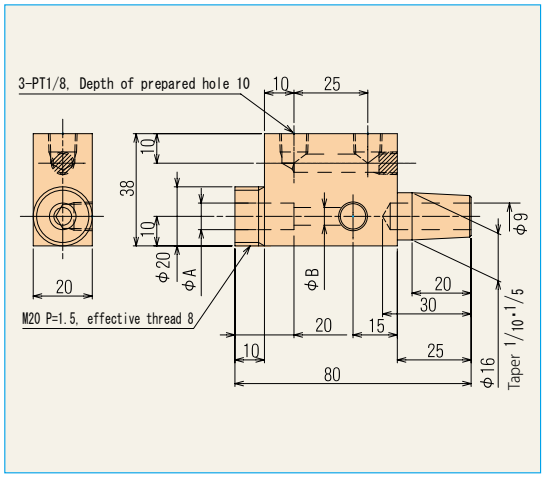

Order code

Saiper cubic holder 20cubic X [Bolt diameter] - [Taper]

Unit : mm

Size			
Bolt diameter	Taper	$A^{+0.2}_{+0.15}$	$B^{+0.1}_{0}$
M 4	16 1/10, 16 1/5	8	5
M 5	16 1/10, 16 1/5	9	6
M 6	16 1/10, 16 1/5	10	7
M 8	16 1/10, 16 1/5	12	9

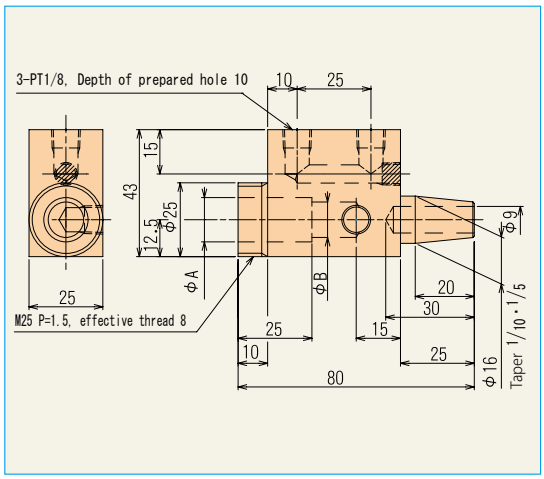

Order code

Saiper cubic holder 25cubic X [Bolt diameter] [Taper]

Unit : mm

Size			
Bolt diameter	Taper	$A^{+0.2}_{+0.15}$	$B^{+0.1}_{0}$
M10	16 1/10, 16 1/5	14	11
M12	16 1/10, 16 1/5	16	13

Saiper round holder

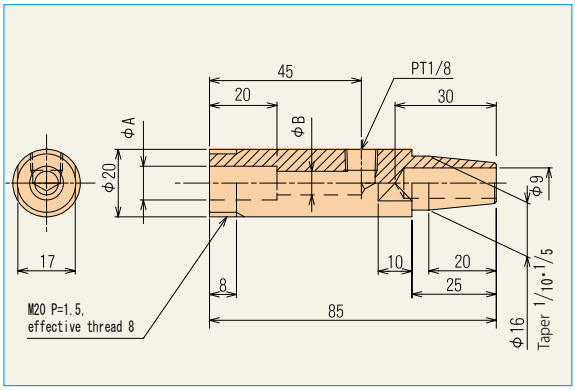

Order code

Saiper round holder 20round X [Bolt diameter] - [Taper]

Unit : mm

Size			
Bolt diameter	Taper	$A^{+0.2}_{+0.15}$	$B^{+0.1}_{0}$
M 4	16 1/10, 16 1/5	8	5
M 5	16 1/10, 16 1/5	9	6
M 6	16 1/10, 16 1/5	10	7
M 8	16 1/10, 16 1/5	12	9

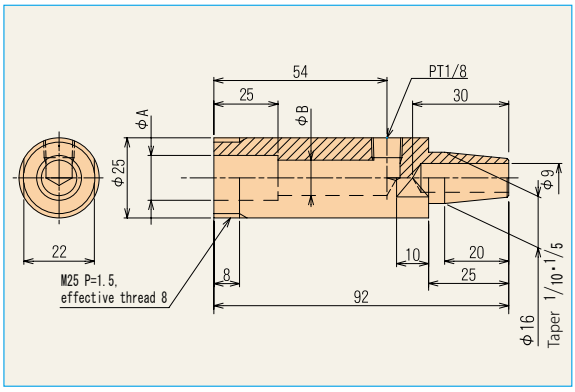

Order code

Saiper round holder 25round X [Bolt diameter] - [Taper]

Unit : mm

Size			
Bolt diameter	Taper	$A^{+0.2}_{+0.15}$	$B^{+0.1}_{0}$
M10	16 1/10, 16 1/5	14	11
M12	16 1/10, 16 1/5	16	13

Electrode for bolt welding

Water cooling jacket

Application ▶ By cooling effect, this gives longer life of electrode and prevention from lowering conductivity by heat ascension.

Features ▶ This matches with various kinds of holders.

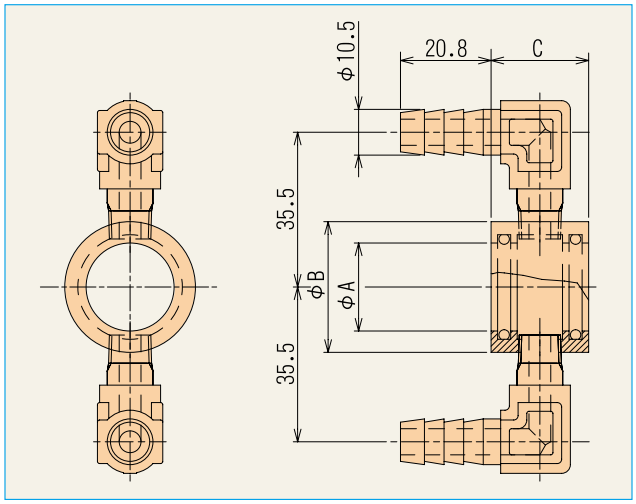

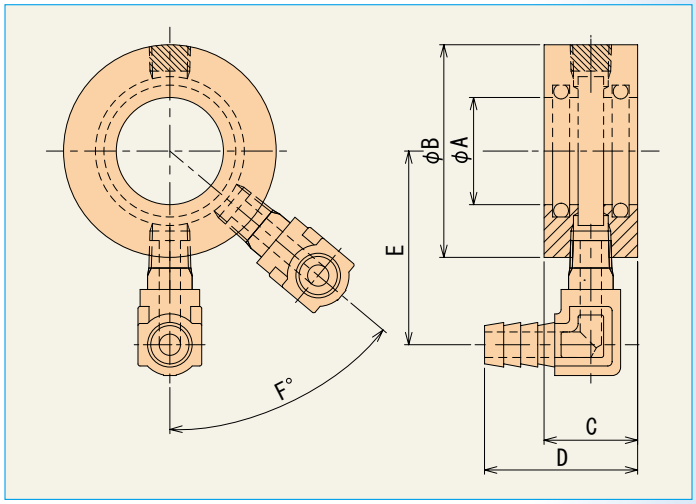

Order code

Water cooling jacket Code I model / II model

Unit : mm

Code		A	B		C		O ring
			I model (Without screw)	II model (With screw)	I model	II model	
18	I model	18.2	30		22.4		P18
	II model	18.2		30		26.5	P18
20	I model	20.2	30		22.4		P20
	II model	20.2		30		26.5	P20
30	I model	30.2	55		22.0		P30
	II model	30.2		50		32.0	P30

Unit : mm

Code		A	B		C		D	E	F	O ring
			I model (Without screw)	II model (With screw)	I model	II model				
25	I model	15.2	50		22		36	45.5	50	P25
	II model	15.2		45		32	43.5	43	50	P25
32	I model	32.2	55		22		36	48	50	P32
	II model	32.2		50		32	43.5	45.5	50	P32

Application ▶ Prevent from spatter adhesion on product (Thread at nut, thread at bolt and also for longer life of electrode.).

Recommendable set = Saiper + Water cooling jacket (with electrode)

Saiper

Water cooling jacket

Straight holder/L-shaped holder

Jointing electrode

Straight holder

Application

- This is mainly used for attaching holder with BS horn of stationery spot welding machine.

Features

- We have wide range selections in diameter, length and taper.

Material：Cu

Type： Outer diameter φ 25 length 150～300. Taper various.
Outer diameter φ 32 length 200～250. Taper various.

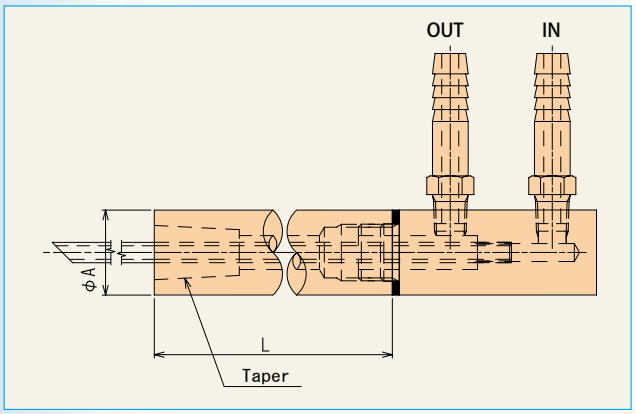

Order code

A × L - Taper

Unit：mm

Size		
A	L	Taper
25	150	$16^1/_{10}$,$16^1/_5$
25	200	$16^1/_{10}$,$16^1/_5$
25	250	$12^1/_{10}$,$16^1/_{10}$,$16^1/_5$, MT2
25	300	$16^1/_{10}$,$16^1/_5$
32	200	$16^1/_{10}$,$16^1/_5$
32	250	$16^1/_{10}$,$16^1/_5$, $20^1/_5$

L-shaped holder

Application

- Principally the usage of this is the same with straight holder but this is used when the shape of the work prevent good connect between electrode and the work (welding object)

Features

- Our varieties are 3 kinds in eccentric length, 2 kinds in degree and 2 kinds in attaching diameter to match with condition.
- Tip taper degree are 2 kinds of 90° & 15° .
- Grip parts are 2 kinds of φ 25 & φ 32.

※ Because this is eccentric product, please use at lower than 2.45KN (2.15kgf) on welding pressure

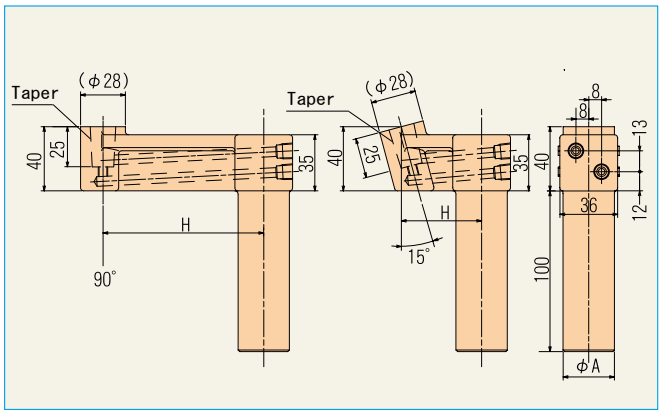

Order code

A × H × Fixing degree - Taper

Unit：mm

Size			
A	H	Fixing degree	Taper
25	50	90°	$16^1/_{10}$,$16^1/_5$
25	70	90°	$16^1/_{10}$,$16^1/_5$
25	100	90°	$16^1/_{10}$,$16^1/_5$
25	50	15°	$16^1/_{10}$,$16^1/_5$
25	70	15°	$16^1/_{10}$,$16^1/_5$
25	100	15°	$16^1/_{10}$,$16^1/_5$

Size			
A	H	Fixing degree	Taper
32	50	90°	$16^1/_{10}$,$16^1/_5$
32	70	90°	$16^1/_{10}$,$16^1/_5$
32	100	90°	$16^1/_{10}$,$16^1/_5$
32	50	15°	$16^1/_{10}$,$16^1/_5$
32	70	15°	$16^1/_{10}$,$16^1/_5$
32	100	15°	$16^1/_{10}$,$16^1/_5$

Insert electrode/Base tip

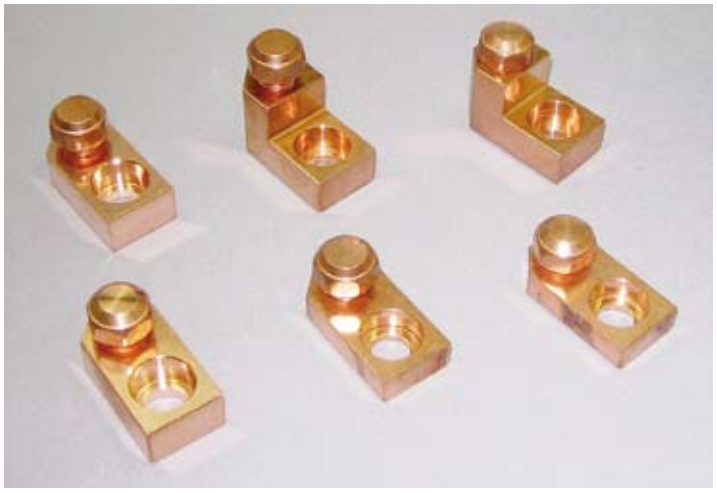

Application

▶ Mainly this is used on multi welding machine etc. By replacing base tip (electrode) only that locating at stationery side, it reduce maintenance cost.

Features

▶ ① W-IN type is made of CuCr. W-IN S type is CuBe50.
② W-IN type is economical as it is replacing way.
③ W-IN S type is also economical as this is partial replacement of base tip.

Insert electrode

Tip replacement system

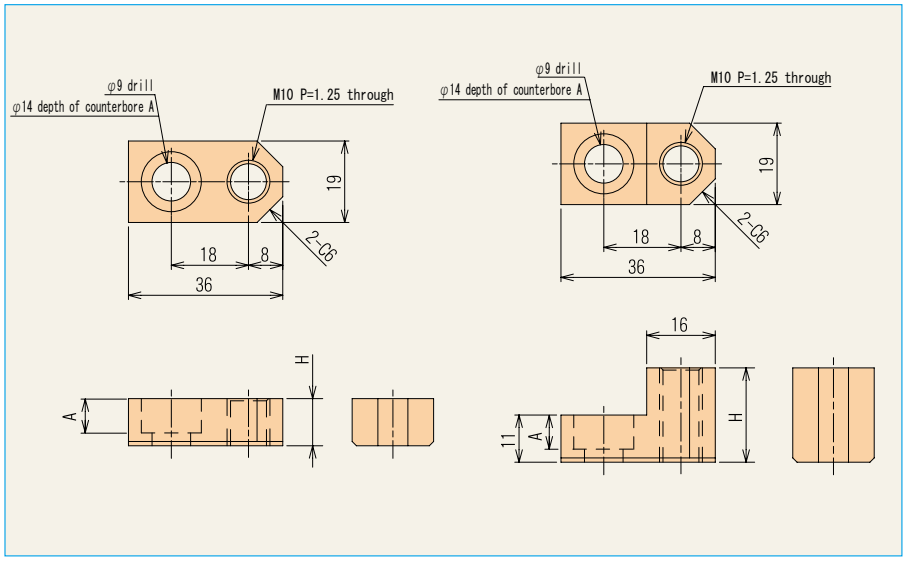

Order code

W-IN-Code-S

Material: CuBe50

Unit : mm

Code	Size	
	A	H
16	6	8
19	8	11
30	8	22

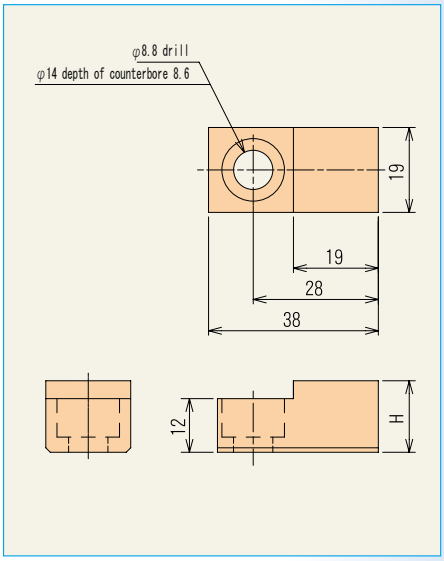

Order code

W-IN-Code

Material: CuCr

Unit : mm

Code	Size
	H
16	16
19	19

Base tip

Tip replacement system

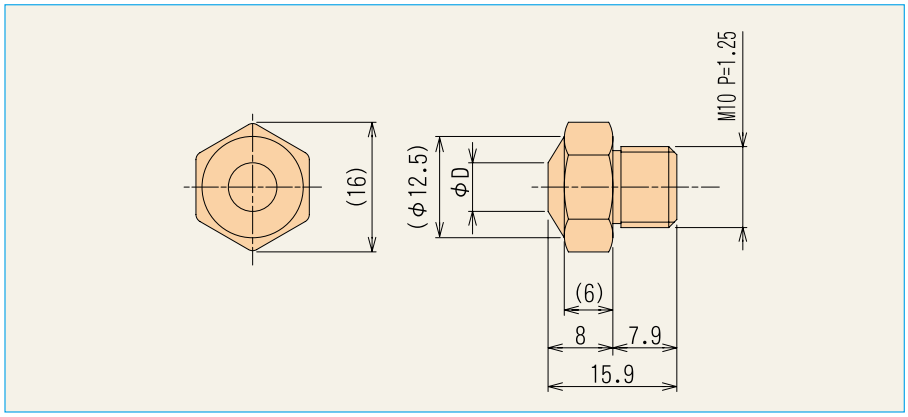

Order code

W-BT-S-Code

Unit : mm

Code	Size
	D
1	6
2	8
3	14

Spot Tip

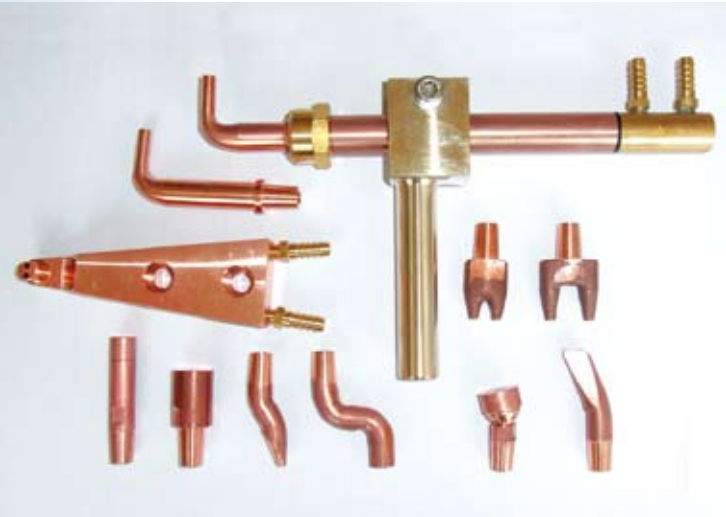

Application

- One body electrode and there are various kind shapes which prevent from hazardous works (welding object).

Features

- Various shapes electrode makes wide ranges welding.

Tip shape

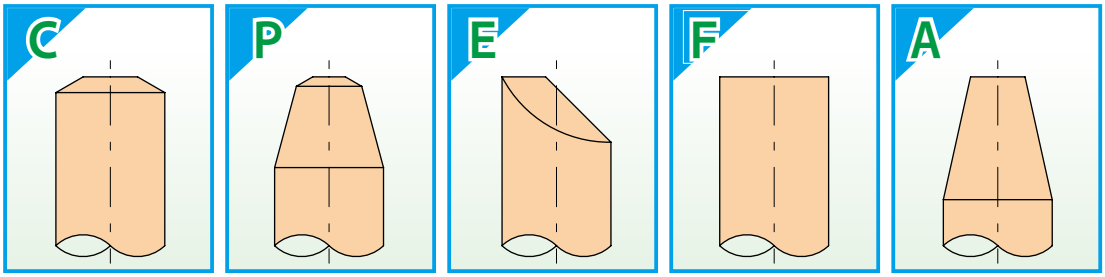

Straight Tip

Order code

SP - 42B - L

■ L size 30, 40, 50

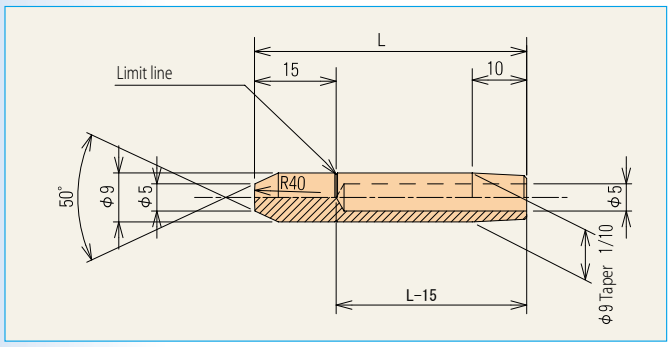

Order code
(Tip shape)
(Outer diameter)

C12 × L

■ L size 40, 45, 50, 60, 70, 80

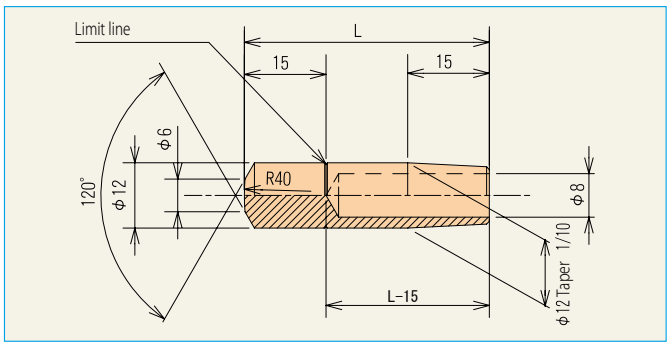

Order code
(Tip shape)
(Outer diameter)

F16 × L - Taper

■ L size 50, 60, 70, 80
■ Taper 1/10, 1/5

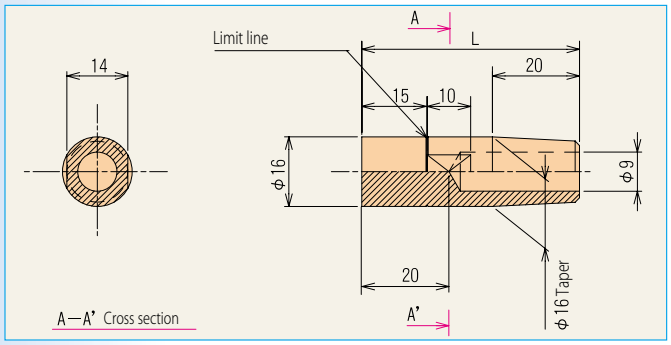

Order code
(Tip shape)

F Outer diameter × 60 - Taper

■ Outer diameter 20, 25, 30
■ Taper 1/10, 1/5

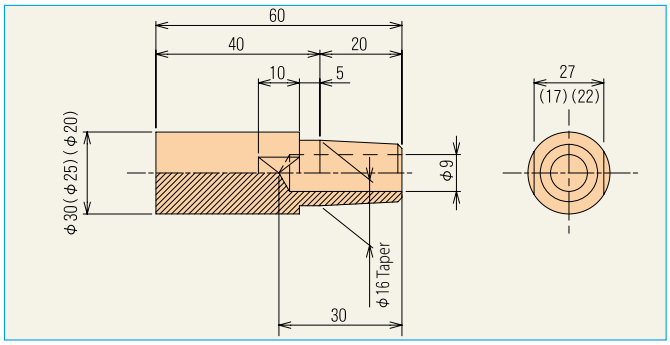

Off set tip

Order code

Curved tip C16 × 30H-16 1/10

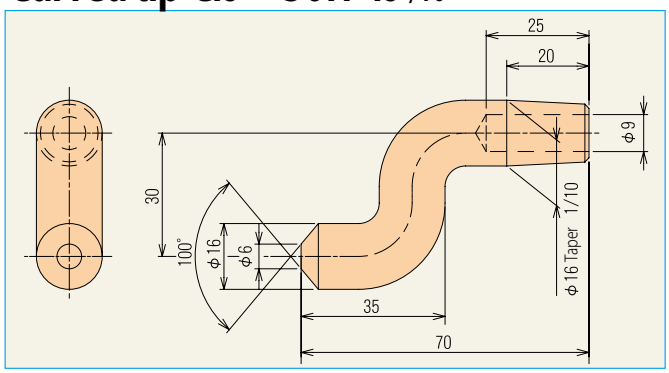

Order code

Curved tip R16 × 35H-Taper
Curved tip R16 × 50H-Taper

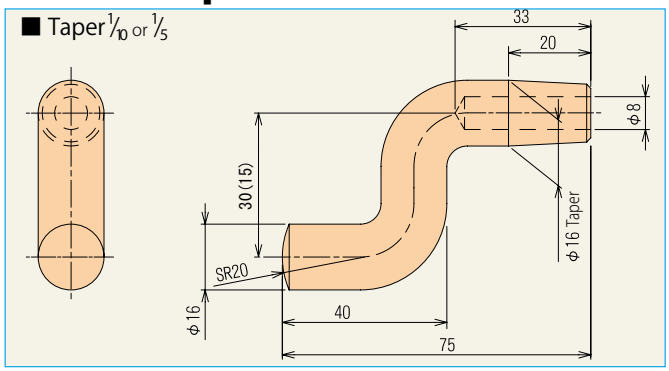

Order code

Curved tip E16 × 15H-16 1/10
Curved tip E16 × 30H-16 1/10

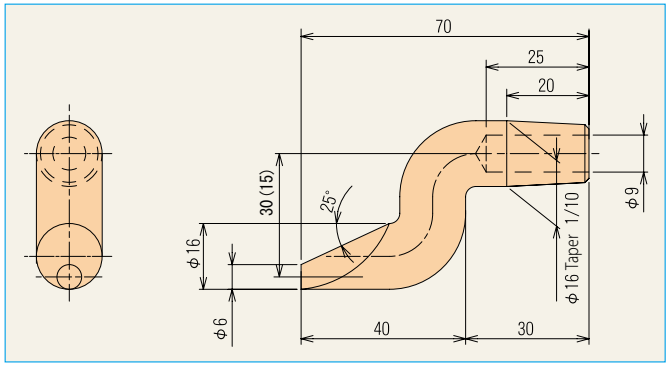

Order code

Bent tip 16 1/10

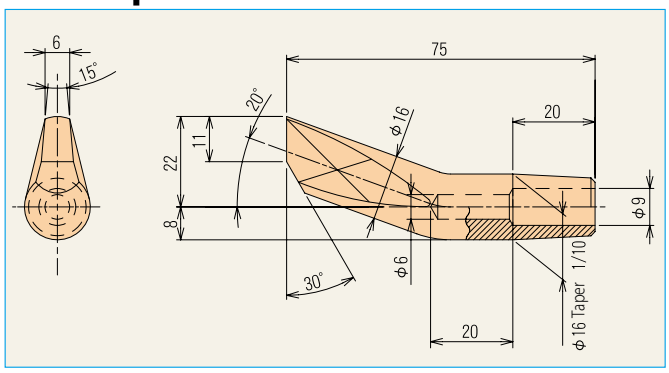

Off set casting tip

Order code

Casting tip C16 × 15H-Taper

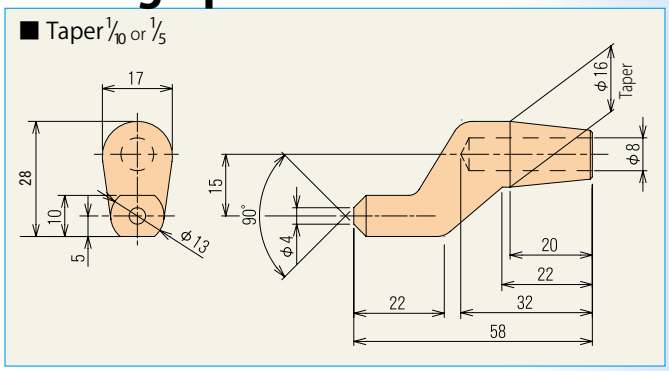

Order code

Casting tip F16 × 30H-Taper
Casting tip F16 × 35H-Taper

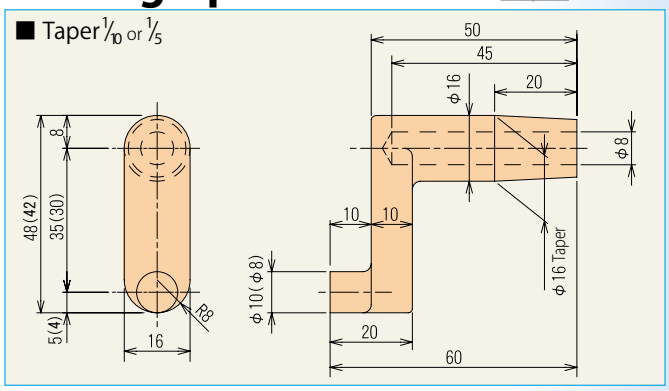

Double spot casting tip

Order code

Casting tip 15P × 50-Taper • 24P × 50-Taper
Casting tip 15P × 60-Taper • 24P × 60-Taper

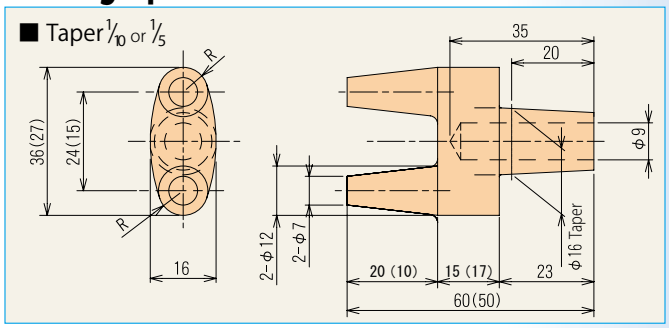

Swivel tip

Order code

Ø A × B - Taper

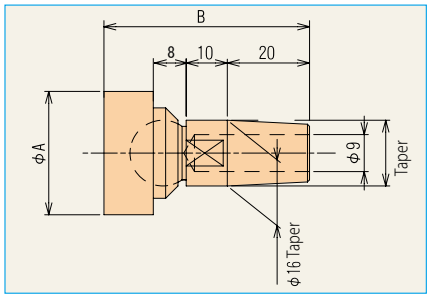

Unit : mm

Size		
A	B	Taper
25	45	12 1/10
25	50	16 1/10, 16 1/5
30	50	12 1/10, 16 1/10

Application ▶ This is the same application with beryllium copper insert tip cap nut type.

Features ▶ This match with small (narrow) work (object) welding as this has few joints that do not interfere to contact with work (welding object).

CuBe insert tip holder

Insert tip

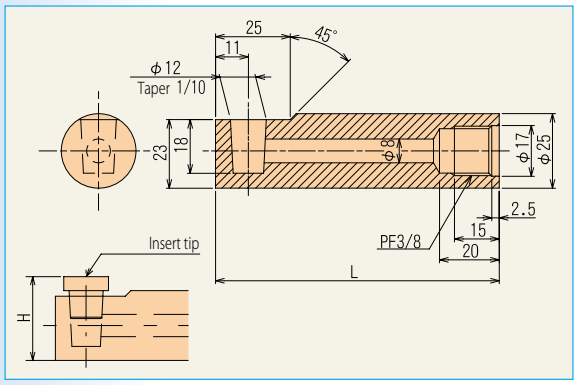

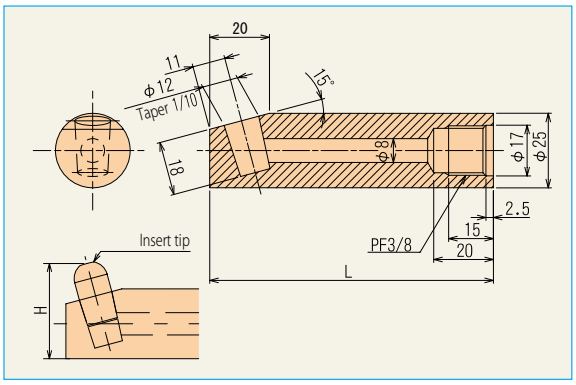

Order code

25×Code-90°

Unit : mm

Code	Size L
100	95
150	145
200	195

Order code

25×Code-15°

Unit : mm

Code	Size L
100	95
150	145
200	195

Insert tip

Unit : mm

Order code	Size H
F13x15	32
F16x15	32
F16x24	37
F20x20	34
F20x24	37
C16x24	37
5Ax22	34
5Ax27	39
5Ax32	44
5Ax37	49

Insert tip

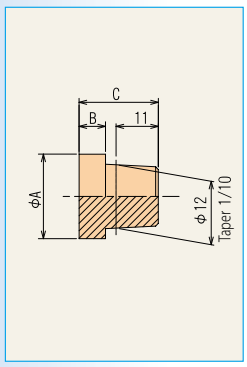

Order code

F A(Ø)×C

Unit : mm

Size		
A	B	C
13	5	15
16	5	15
16	11	24
20	7	20
20	11	24

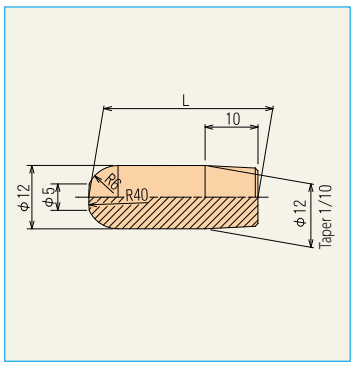

Order code

5A×L

Unit : mm

Size
L
22
27
32
37

Order code

C16×24

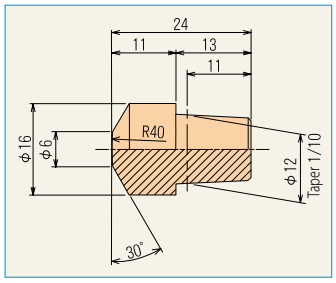

BS insert holder

Order code

BS insert holder Ø25×90°
BS insert holder Ø32×90°

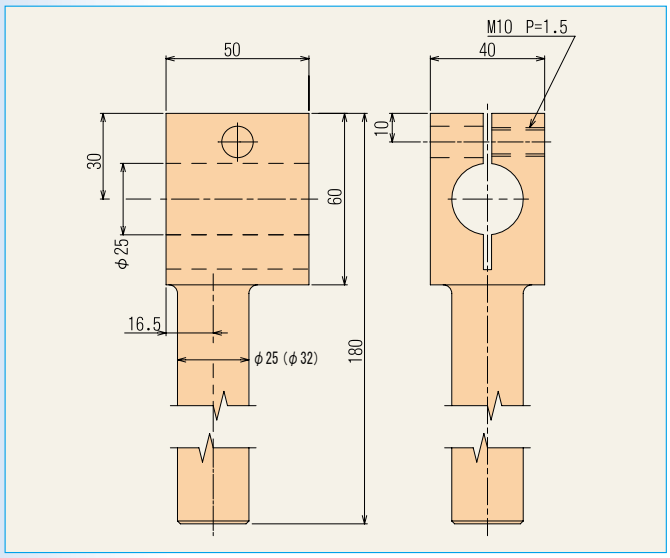

Order code

BS insert holder Ø25×15°
BS insert holder Ø32×15°

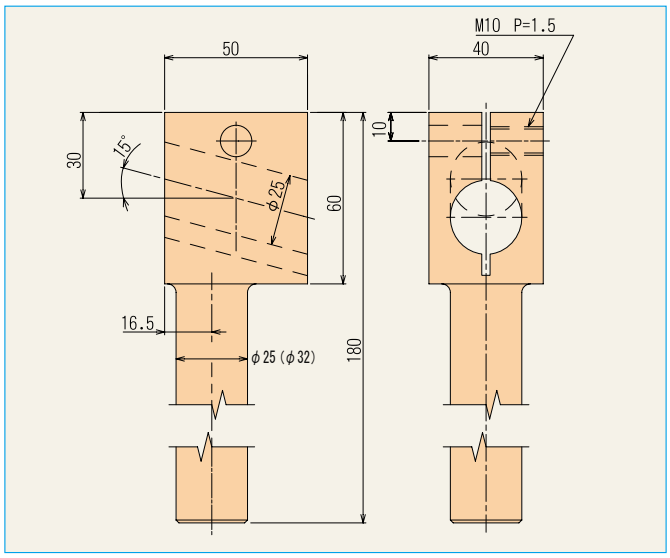

Application

- Gun tip (Gun shank) is inserted into the taper and is fixed with cap nut. Holder is inserted into the φ 25 part of BS insert holder and is fixed tightly with M10 bolt. This Gun tip is used for welding on Box shaped and C shaped products and also at the place Flanges (Walls) is locating.

Features

- This is applicable to the product that cannot be welded directly.
- Gun shank allow to use Cap tip that is economical.
- This is stronger than L shaped holder and further have flexibility in adjustment on eccentricity that give application to wide range works (welding objects).

CuBe insert holder cap nut type

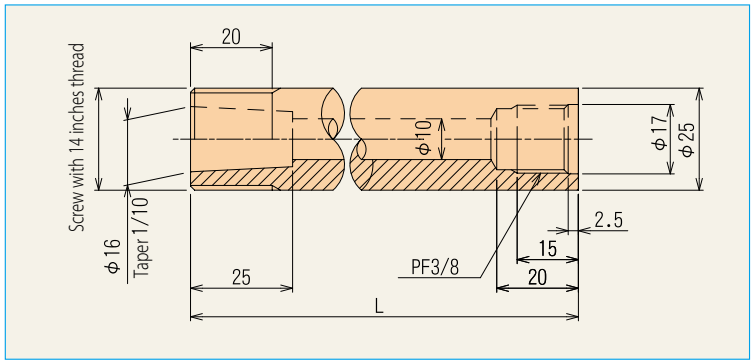

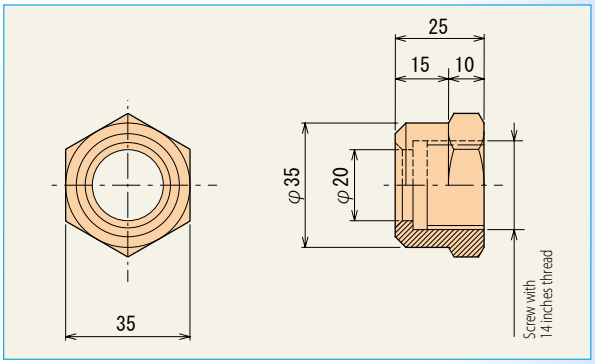

Order code

CuBe insert holder cap nut type Code

Unit : mm

Code	Size
	L
Ø25×100	95
Ø25×150	145
Ø25×200	195

Order code

Cap nut

Gun tip

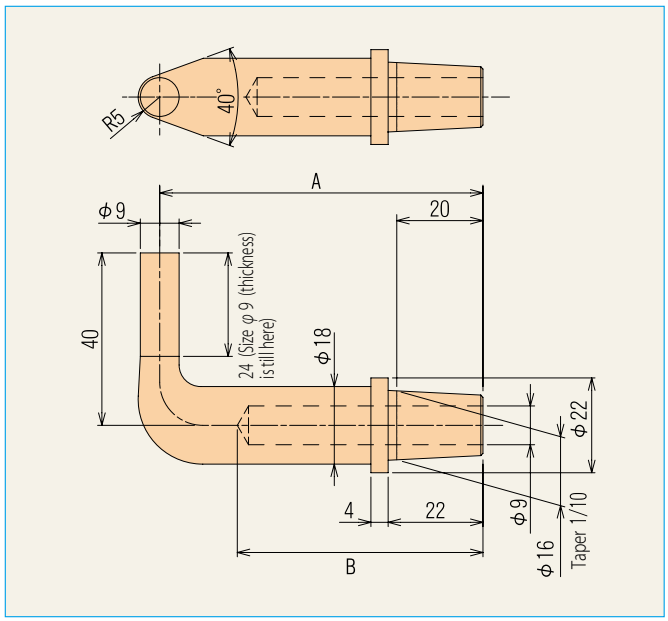

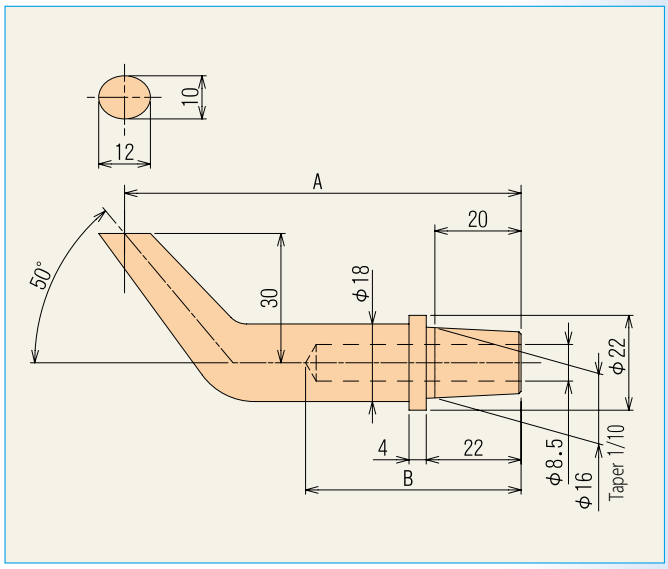

Order code

Gun tip Code

Unit : mm

Code	Size	
	A	B
X-25 Large	105	85
X-25 Small	75	57

Order code

Gun tip Code

Unit : mm

Code	Size	
	A	B
X-27 Large	132	90
X-27 Medium	112	70
X-27 Small	92	50

Gun shank

Order code

Gun shank ∅13×15°
Gun shank ∅16×15°

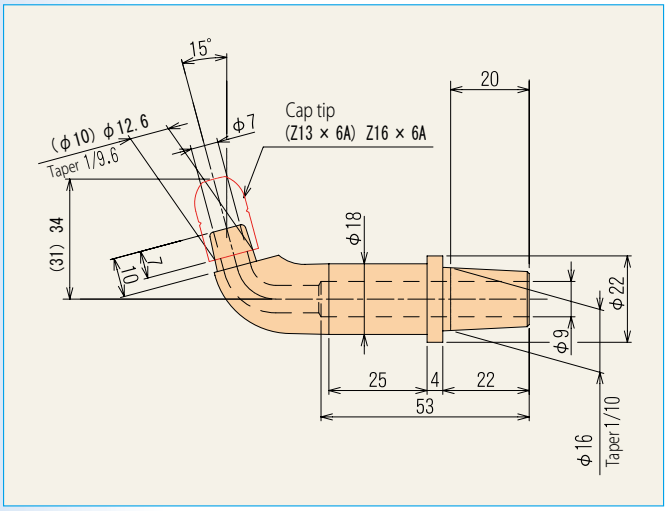

Order code

Gun shank ∅13×90°
Gun shank ∅16×90°

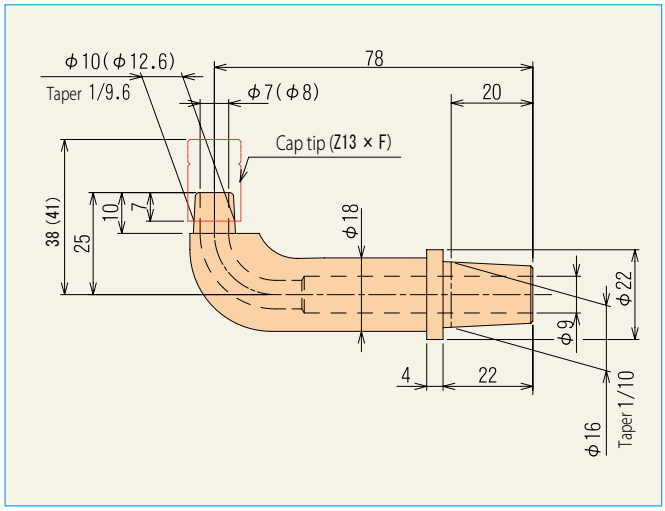

Triangular holder

Order code

Triangular holder 002 model- I

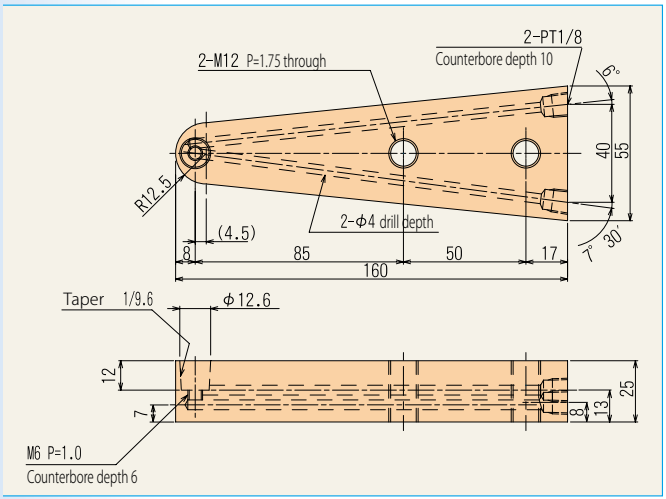

Order code

Triangular holder 012 model- I

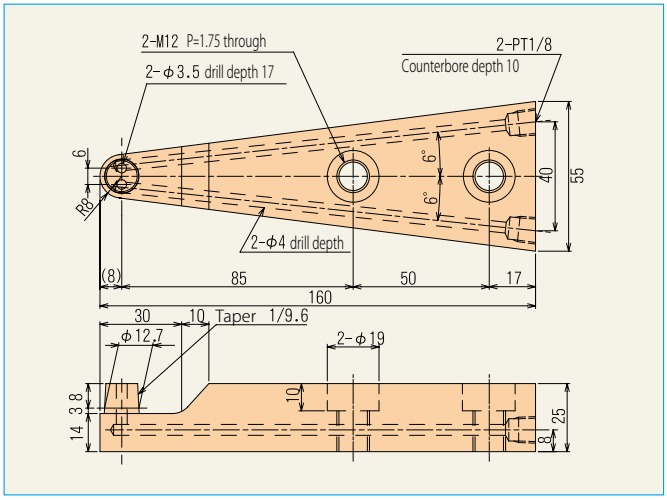

Order code

Triangular holder 002 model-II

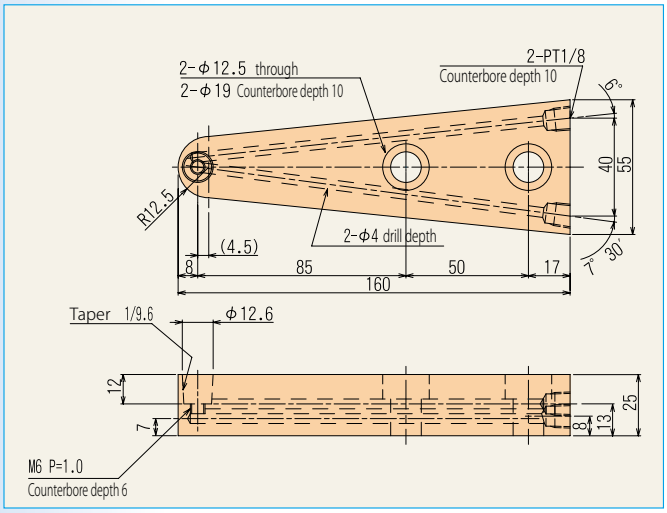

Order code

Triangular holder 012 model-II

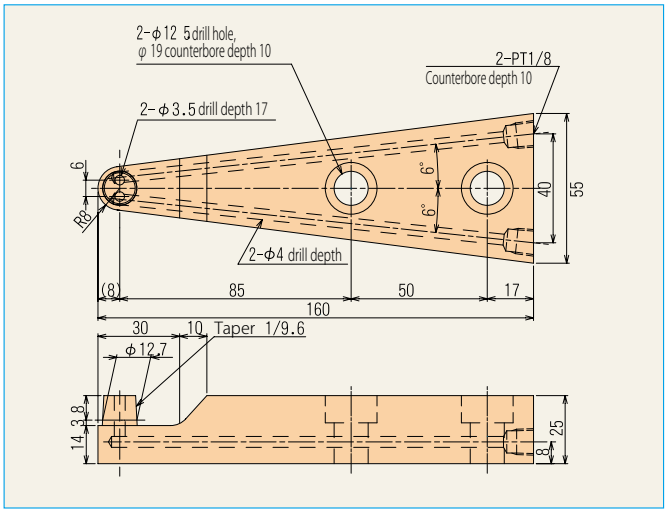

Order code

Shank model 011 for Triangular holder

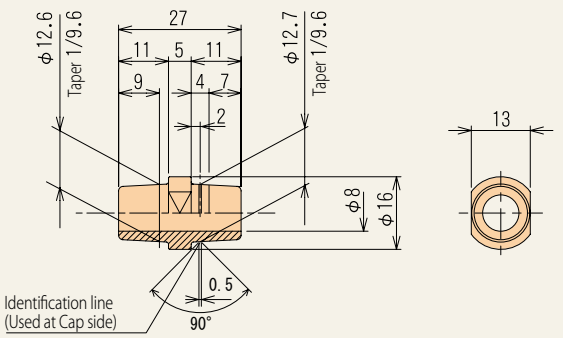

Order code

BS Horn for Triangular holder

L

(ø60 × L) ■ L=250L, 300L

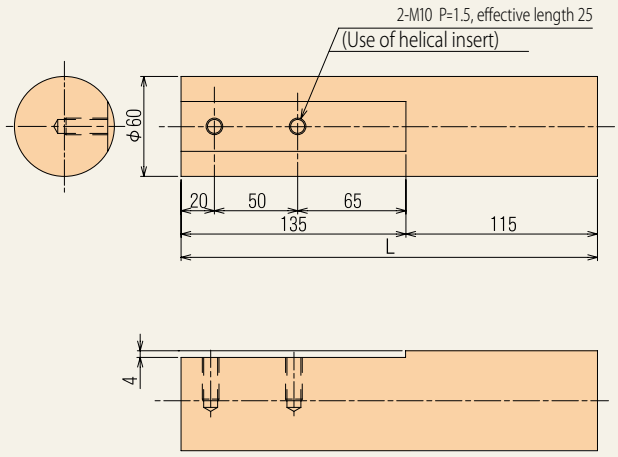

BS horn

Order code

BS horn Code

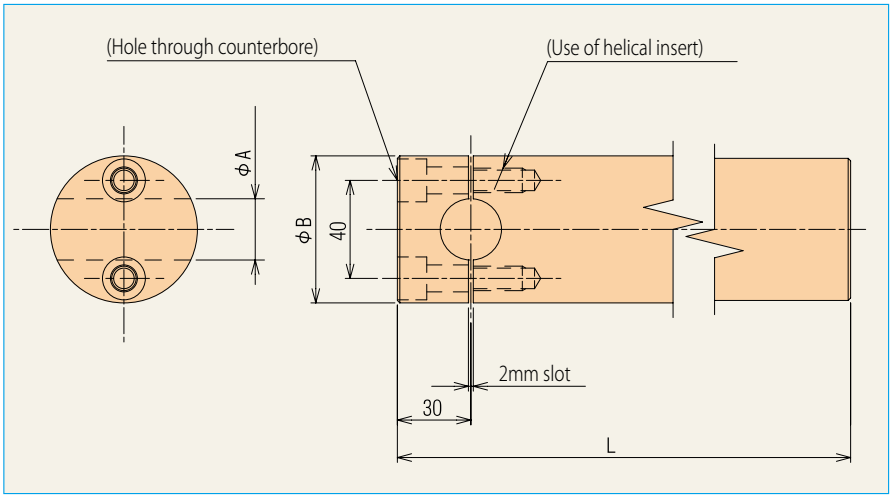

Regular stock

Unit : mm

Code	Size	
	B	L
Ø60 × 200	60	200
Ø60 × 250	60	250
Ø60 × 300	60	300
Ø60 × 350	60	350
Ø60 × 400	60	400

Product by order

Unit : mm

Size and terms	
A	Ø25 Ø32
L	Option
B	Ø55—M8 two screws fixing
B	Ø70—M10 two screws fixing
B	Ø80—M12 two screws fixing
B	Ø80—M10 four screws fixing

BS shifting holder

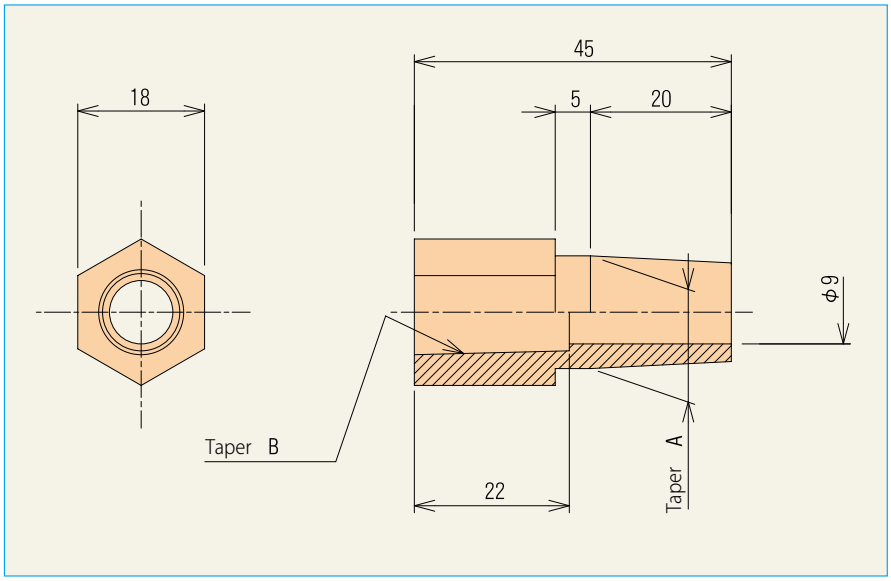

Order code

BS shifting holder Code

BS hexagonal material

Unit : mm

Code	Size	
	A	B
$16^{1}/_{10}$ → $12^{1}/_{10}$	$16^{1}/_{10}$	$12^{1}/_{10}$
$16^{1}/_{5}$ → $12^{1}/_{10}$	$16\ ^{1}/_{5}$	$12^{1}/_{10}$
$16^{1}/_{10}$ → 12MT1	$16^{1}/_{10}$	12MT1
$16^{1}/_{5}$ → 12MT1	$16\ ^{1}/_{5}$	12MT1

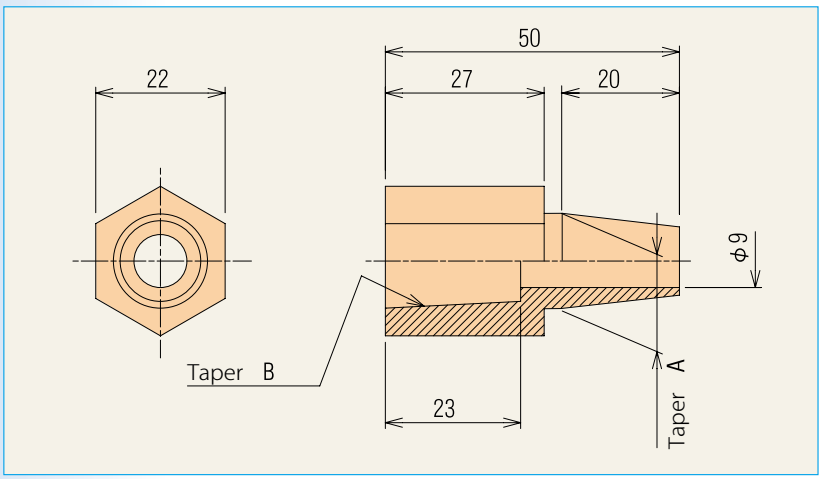

Order code

BS shifting holder Code

BS

Unit : mm

Code	Size	
	A	B
16 1/5 → 16 1/10	16 1/5	16 1/10
16 1/10 → 16 1/5	16 1/10	16 1/5
16 1/10 → 16MT2	16 1/10	16MT2
16MT2 → 16 1/10	16MT2	16 1/10

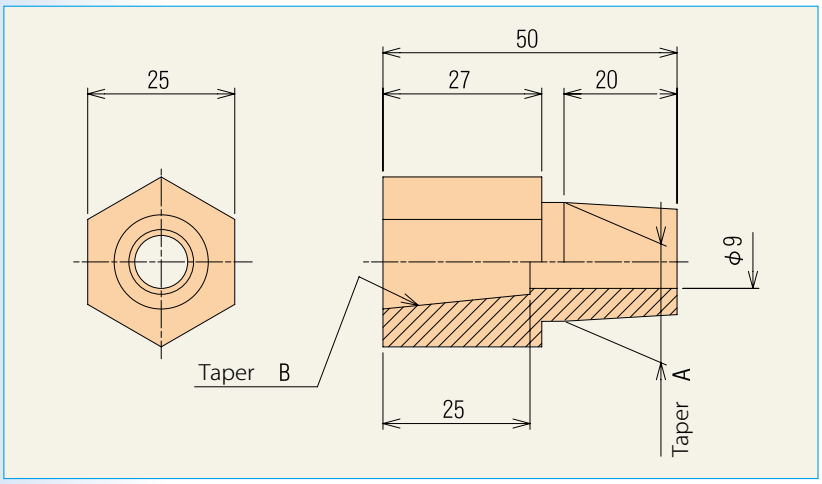

Order code

BS shifting holder Code

BS

Unit : mm

Code	Size	
	A	B
20 1/10 → 16 1/5	20 1/10	16 1/5
20 1/10 → 16 1/10	20 1/10	16 1/10
20 1/5 → 16 1/10	20 1/5	16 1/10
20 1/5 → 16 1/5	20 1/5	16 1/5
20 1/10 → 16MT2	20 1/10	16MT2

CuCr shifting holder

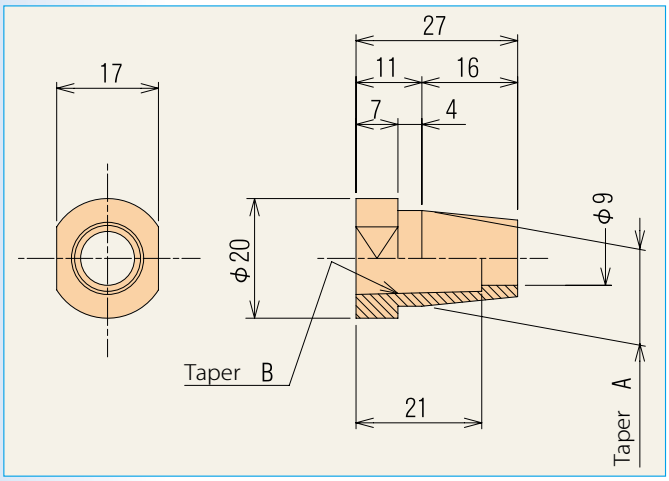

Order code

CuCr shifting holder Code

Unit : mm

Code	Size	
	A	B
16 1/10 → 12 1/10	16 1/10	12 1/10
16 1/5 → 12 1/10	16 1/5	12 1/10
16MT2 → 12 1/10	16MT2	12 1/10
16 1/10 → 12MT1	16 1/10	12MT1
16 1/5 → 12MT1	16 1/5	12MT1
16MT2 → 12MT1	16MT2	12MT1
20 1/5 → 16 1/5	20 1/5	16 1/5
20 1/5 → 16 1/10	20 1/5	16 1/10
20 1/10 → 16 1/5	20 1/10	16 1/5
20 1/10 → 16 1/10	20 1/10	16 1/10

Shifting holder

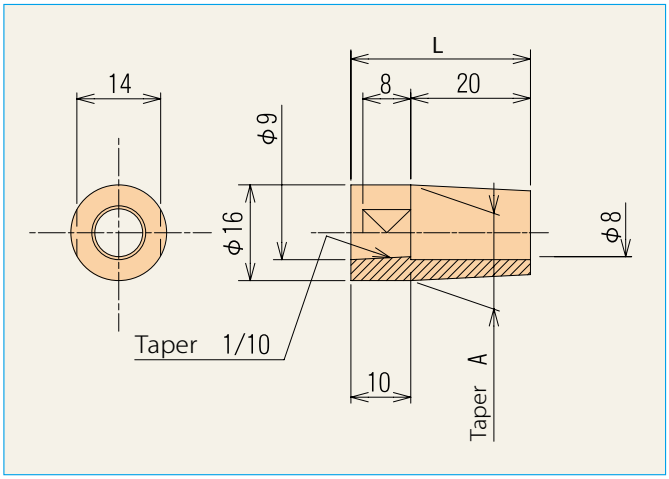

Order code

SP-42A-Code-Taper

Unit : mm

Code	Size	
	A	L
30	16 1/10, 16 1/5	30
40	16 1/10, 16 1/5	40
50	16 1/10, 16 1/5	50

Cable adapter/Transformer adapter

Application

Cable adapter

This is adapter for air-cooling cable and water-cooling cable.

Transformer adapter

This is connecting adapter between transformer terminal and cables etc.

Cable adapter

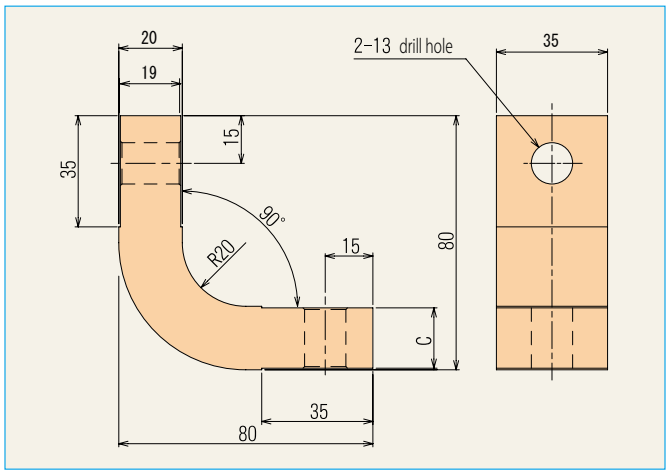

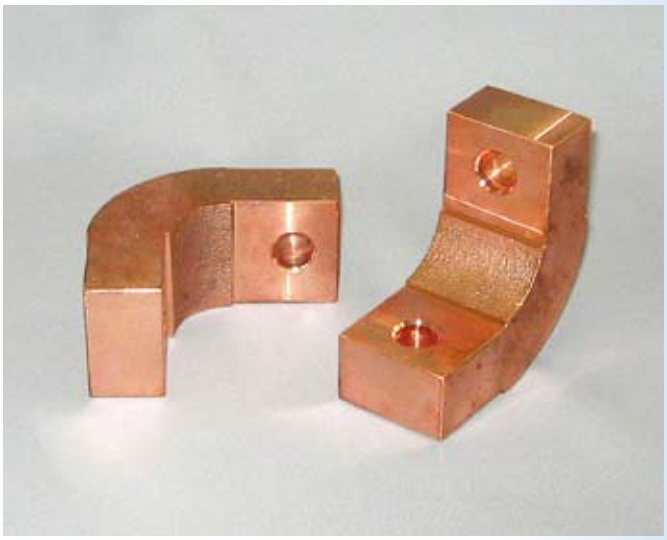

Order code

W-CA-A

Transformer adapter

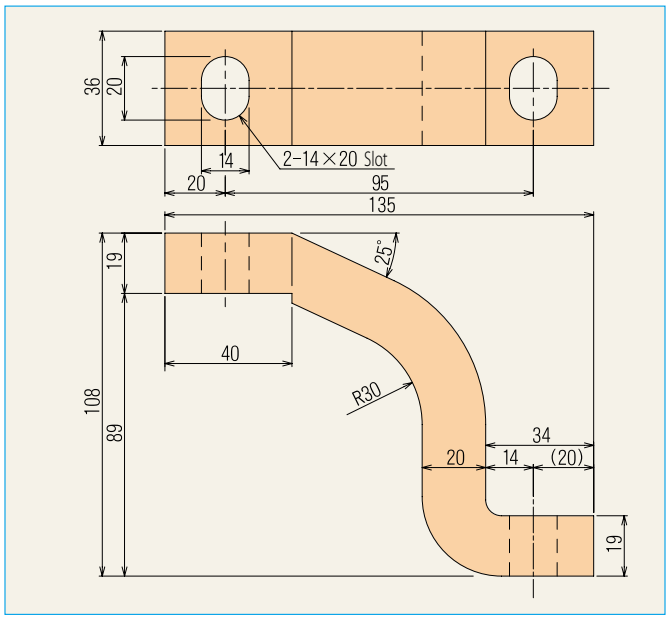

Order code

W-JCU-S-100

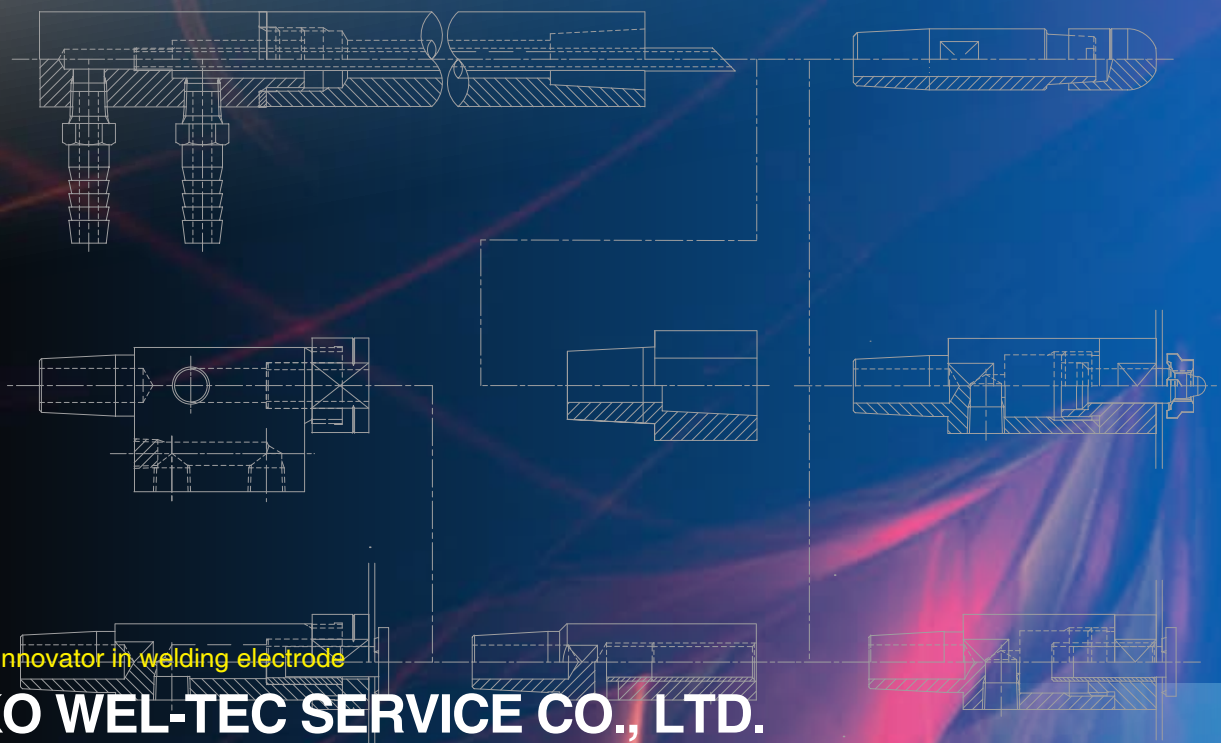

Pioneer and innovator in welding electrode

SHINKO WEL-TEC SERVICE CO., LTD.

Head office

700-647 Moo 1 Amata Nakorn Industrial Estate.
T.Panthong A. Panthong Chonburi 20160
Tel : 038-447 144 Fax : 038-447-145

We may change the specification of our products without any notice for improvement of the quality. Please ask our local office if necessary.

08.09

General catalogue on welding electrode

SHINKO

SHINKO WEL-TEC SERVICE CO., LTD.